Product data sheet
Characteristics

TM5SAI4PH
analog input module, Modicon TM5, 4I, temperature probe PT100, PT1000, 16bits

Main

Range of Product	Modicon TM5
Product or Component Type	Analog input module
Analogue input number	4
Analogue input type	Pt 100/Pt 1000 temperature probe - 200...850 °C
Analogue input resolution	16 bits

Complementary

Range Compatibility	Modicon LMC058 Modicon M258
Product Compatibility	Logic controller Motion controller
Measurement resolution	0.1 °C
Color	White
Measurement error	< 0.037 % of full scale - 200...850 °C Pt 100/Pt 1000 25 °C
Temperature coefficient	0.004 %FS/°C temperature probe
Non-linearity	0.001 %FS temperature probe
Type of Cable	Shielded cable
Isolation	No insulation between channels 500 Vrms AC insulation between channel and bus
Supply	Internal
[Us] rated supply voltage	24 V DC -15...20 %
Common mode rejection	> 95 dB
Local signalling	1 LED green power supply 1 LED red power supply 4 LEDs green input status
Current consumption	2 mA 5 V DC bus 46 mA 24 V DC input/output
Maximum power dissipation in W	1.11 W
Marking	CE
Net Weight	0.06 lb(US) (0.025 kg)

Environment

Standards	UL 508 CSA C22.2 No 213 IEC 61131-2 CSA C22.2 No 142
Product Certifications	GOST-R[RETURN]CSA[RETURN]C-tick[RETURN]cULus
Ambient air temperature for operation	32…131 °F (0…55 °C) without derating horizontal installation) 32…140 °F (0…60 °C) with derating factor horizontal installation) 32…122 °F (0…50 °C) vertical installation)
Ambient Air Temperature for Storage	-13…158 °F (-25…70 °C)
Relative humidity	5…95 % without condensation
IP degree of protection	IP20IEC 61131-2
Pollution degree	2 IEC 60664

The information provided in this documentation contains general descriptions and/or technical characteristics of the performance of the products contained herein.
This documentation is not intended as a substitute for and is not to be used for determining suitability or reliability of these products for specific user applications.
It is the duty of any such user or integrator to perform the appropriate and complete risk analysis, evaluation and testing of the products with respect to the relevant specific application or use thereof.
Neither Schneider Electric Industries SAS nor any of its affiliates or subsidiaries shall be responsible or liable for misuse of the information contained herein.

Operating altitude	0...6561.68 ft (0...2000 m)
Storage altitude	0.00…9842.52 ft (0…3000 m)
Vibration resistance	1 gn 8.4…150 Hz DIN rail 3.5 mm 5…8.4 Hz DIN rail
Shock resistance	15 gn 11 ms
Resistance to electrostatic discharge	4 KV on contact IEC 61000-4-2 8 kV in air IEC 61000-4-2
Resistance to electromagnetic fields	0.91 V/M (1 V/m) 2...2.7 GHz IEC 61000-4-3 9.14 V/m (10 V/m) 80...2000 MHz IEC 61000-4-3
Resistance to fast transients	1 KV IEC 61000-4-4 I/O) 1 KV IEC 61000-4-4 shielded cable) 2 kV IEC 61000-4-4 power lines)
Surge withstand	0.5 KV differential mode IEC 61000-4-5 1 kV common mode IEC 61000-4-5
Electromagnetic compatibility	EN/IEC 61000-4-6
Disturbance radiated/conducted	CISPR 11

Ordering and shipping details

Category	22532-M258 PLC
Discount Schedule	PC12
GTIN	3595864074771
Returnability	No
Country of origin	AT

Packing Units

Unit Type of Package 1	PCE
Number of Units in Package 1	1
Package 1 Height	0.79 in (2.0 cm)
Package 1 Width	2.36 in (6.0 cm)
Package 1 Length	4.13 in (10.5 cm)
Package 1 Weight	1.45 oz (41.0 g)
Unit Type of Package 2	S02
Number of Units in Package 2	97
Package 2 Height	5.91 in (15.0 cm)
Package 2 Width	11.81 in (30.0 cm)
Package 2 Length	15.75 in (40.0 cm)
Package 2 Weight	8.77 lb(US) (3.977 kg)

Offer Sustainability

Sustainable offer status	Green Premium product
California proposition 65	WARNING: This product can expose you to chemicals including: Lead and lead compounds, which is known to the State of California to cause cancer and birth defects or other reproductive harm. For more information go to www.P65Warnings.ca.gov
REACh Regulation	REACh Declaration
REACh free of SVHC	Yes
EU RoHS Directive	Pro-active compliance (Product out of EU RoHS legal scope) EU RoHS Declaration
Toxic heavy metal free	Yes
Mercury free	Yes
China RoHS Regulation	China RoHS Declaration
RoHS exemption information	Yes
Environmental Disclosure	Product Environmental Profile
Circularity Profile	End Of Life Information
WEEE	The product must be disposed on European Union markets following specific waste collection and never end up in rubbish bins.
PVC free	Yes

Contractual warranty

Warranty	18 months

TM5SAI4PH

TM5 Slice

Dimensions

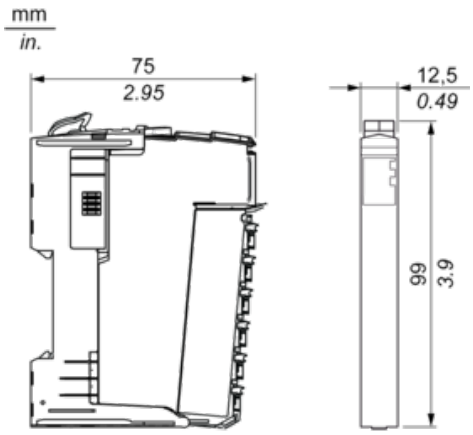

TM5 System

Spacing Requirements

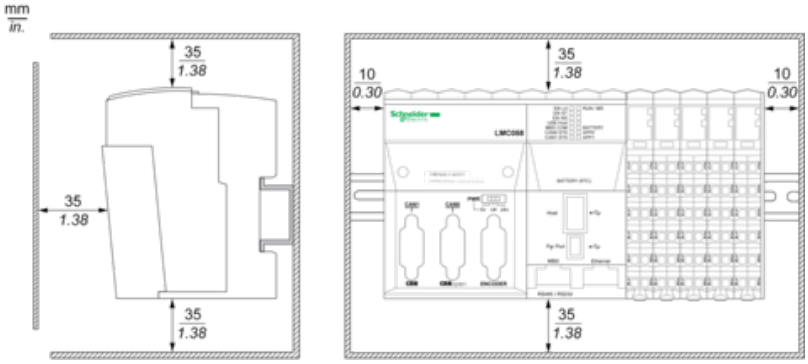

Mounting on a DIN Rail

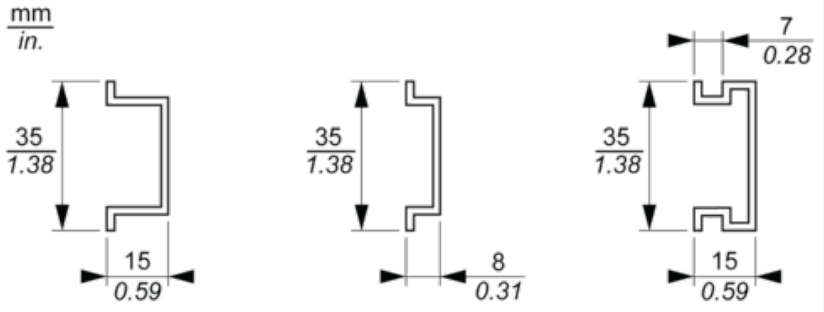

TM5 System Wiring Recommendations

Wire Sizes to Use with the Removable Spring Terminal Blocks

mm / in. 9 / 0.35				
mm²	0,08…2,5	0,25…2,5	0,25…1,5	2 x 0,25...2 x 0,75
AWG	28…14	24…14	24…16	2 x 24…2 x 18

Electronic Module 4AI PT100/PT1000 16 Bits

Wiring Diagrams

The following figure shows the 2-wire wiring diagram:

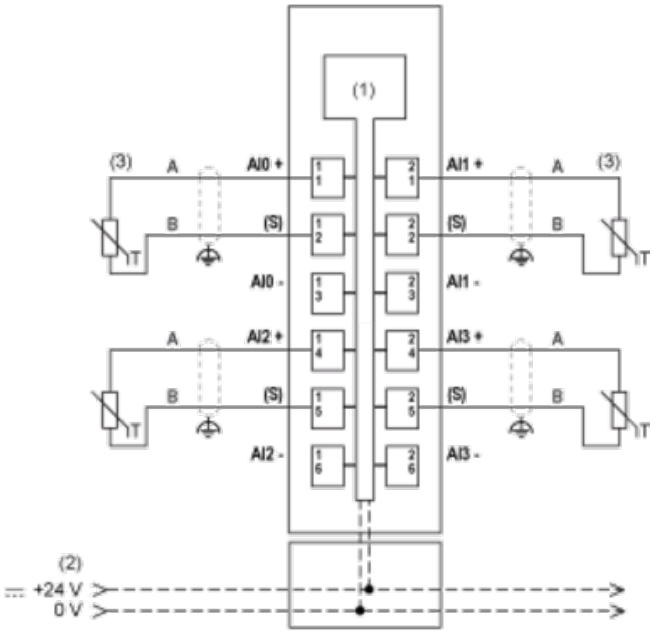

(1) Internal electronics

(2) 24 Vdc I/O power segment integrated into the bus bases

(3) 2-wire sensor

(S) Sensor

The following figure shows the 3-wire and 4-wire wiring diagram:

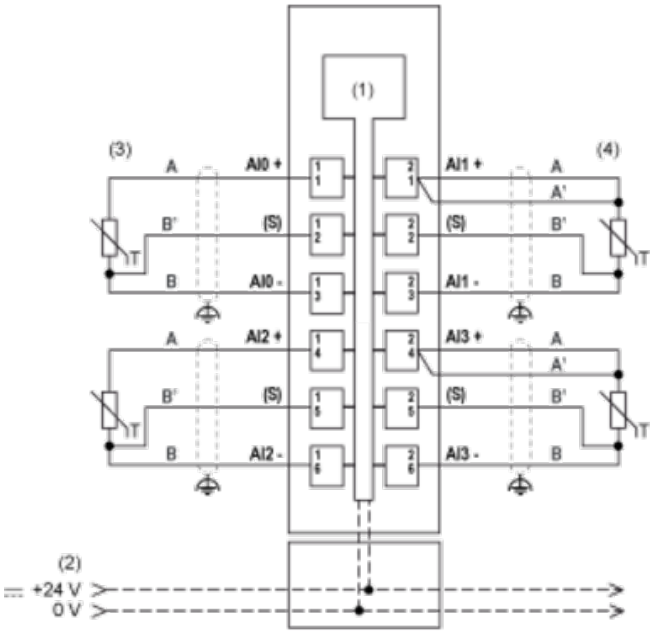

(1) Internal electronics

(2) 24 Vdc I/O power segment integrated into the bus bases

(3) 3-wire sensor

(4) 4-wire sensor

(S) Sensor