# Product data sheet
## Characteristics

# TSXPAY262
## Preventa safety module, Modicon Premium, 19.2 to 30VDC, 30mA, 5W

### Main

| | |
|---|---|
| Range of Product | Modicon Premium Automation platform |
| Product or Component Type | Preventa safety module |

### Complementary

| | |
|---|---|
| [Us] rated supply voltage | 24 V DC |
| Supply voltage limits | 19.2…30 V |
| Activation threshold | < 20 V |
| Short-circuit protection | 1 A gG external IEC 947-5-1 on power supply<br>4 A gG external IEC 947-5-1 on safety relay outputs |
| Isolation voltage | 4000 V III 2 |
| Discrete input number | 1 double or single contact selection input IEC 1131 Type 1<br>1 feedback loop input IEC 1131 Type 1<br>1 reset PB input IEC 1131 Type 1<br>1 reset PB monitoring input IEC 1131 Type 1<br>12 emergency stop or limit switch discrete inputs IEC 1131 Type 1 |
| Discrete input logic | Positive |
| Inrush current | 0.5 A |
| Isolation between input and earth | 500 Vrms 50/60 Hz 60 s |
| Maximum power dissipation in W | 5 W |
| Safety outputs | 2 NO safety relay AGCDO gold plated volt free output |
| [Ue] rated operational voltage | 17...127 V DC relay output<br>19...250 V AC relay output |
| Rated power in VA | 120 VA 48 V AC-15 inductive<br>280 VA 110 V AC-15 inductive<br>550 VA 220 V AC-15 inductive<br>60 VA 24 V AC-15 inductive |
| Rated power in W | 60 W 24 V DC-13 inductive 100 ms |
| [Ithe] conventional enclosed thermal current | 2.5 A |
| Minimum output current | 30 mA |
| Response time on output | < 12 ms |
| Isolation between output and earth | 300 V DIN VDE 0110 part 2<br>1500 Vrms 50/60 Hz 60 s |
| Safety acquisition | Read feedback loop<br>Monitor external power supply of the module<br>Read enable inputs<br>Read the safety outputs control<br>Read status of the 24 inputs |
| Local signalling | For diagnostic of safety system 28 LEDs |
| Electrical connection | 1 connector removable screw terminal block 6 pins for connecting the safety output<br>1 connector SUB-D 44 pins for connecting the safety system input |
| Cable cross section | 0.00…0.00 In² (0.2…2.5 mm²) without cable end safety output circuit<br>0.00 in² (1.5 mm²) with cable end safety output circuit |

The information provided in this documentation contains general descriptions and/or technical characteristics of the performance of the products contained herein.
This documentation is not intended as a substitute for and is not to be used for determining suitability or reliability of these products for specific user applications.
It is the duty of any such user or integrator to perform the appropriate and complete risk analysis, evaluation and testing of the products with respect to the relevant specific application or use thereof.
Neither Schneider Electric Industries SAS nor any of its affiliates or subsidiaries shall be responsible or liable for misuse of the information contained herein.

| | |
|---|---|
| Current consumption | < 150 mA 5 V DC<br><= 200 mA 24 V DC |
| Module format | Standard |
| Net Weight | 0.95 lb(US) (0.43 kg) |

## Environment

| | |
|---|---|
| Ambient Air Temperature for Operation | 32…104 °F (0…40 °C) without fan<br>32…140 °F (0…60 °C) with fan module |
| Ambient Air Temperature for Storage | -13…158 °F (-25…70 °C) |
| IP degree of protection | IP20 conforming to IEC 60529 |
| Standards | EN 954 machine safety parts of control systems<br>EN/IEC 60204-1 machine electrical equipment<br>EN/IEC 61131-2 specific requirements (PLC)<br>EN/ISO 12100 machine electrical equipment<br>ISO 13850 emergency stop equipment<br>UL 508 specific requirements (PLC)<br>ISO 13849-1 category 4 machine safety parts of control systems<br>IEC 61508 SIL 3 machine safety parts of control systems<br>CSA C22.2 specific requirements (PLC) |
| Product Certifications | BG[RETURN]CSA[RETURN]UL |

## Ordering and shipping details

| | |
|---|---|
| Category | 22558-TSX PREMIUM, ATRIUM & PL7 PRO |
| Discount Schedule | PC22 |
| GTIN | 3389110105674 |
| Returnability | No |
| Country of origin | FR |

## Packing Units

| | |
|---|---|
| Unit Type of Package 1 | PCE |
| Number of Units in Package 1 | 1 |
| Package 1 Height | 2.17 in (5.5 cm) |
| Package 1 Width | 7.09 in (18.0 cm) |
| Package 1 Length | 10.24 in (26.0 cm) |
| Package 1 Weight | 19.89 oz (563.9 g) |
| Unit Type of Package 2 | S04 |
| Number of Units in Package 2 | 12 |
| Package 2 Height | 11.81 in (30.0 cm) |
| Package 2 Width | 15.75 in (40.0 cm) |
| Package 2 Length | 23.62 in (60.0 cm) |
| Package 2 Weight | 14.92 lb(US) (6.768 kg) |

## Offer Sustainability

| | |
|---|---|
| California proposition 65 | WARNING: This product can expose you to chemicals including: Lead and lead compounds which is known to the State of California to cause cancer and birth defects or other reproductive harm. For more information go to www.P65Warnings.ca.gov |

## Contractual warranty

| | |
|---|---|
| Warranty | 18 months |

## Standard and Extendable Racks for Modules Mounting

### Dimensions of Modules and Racks

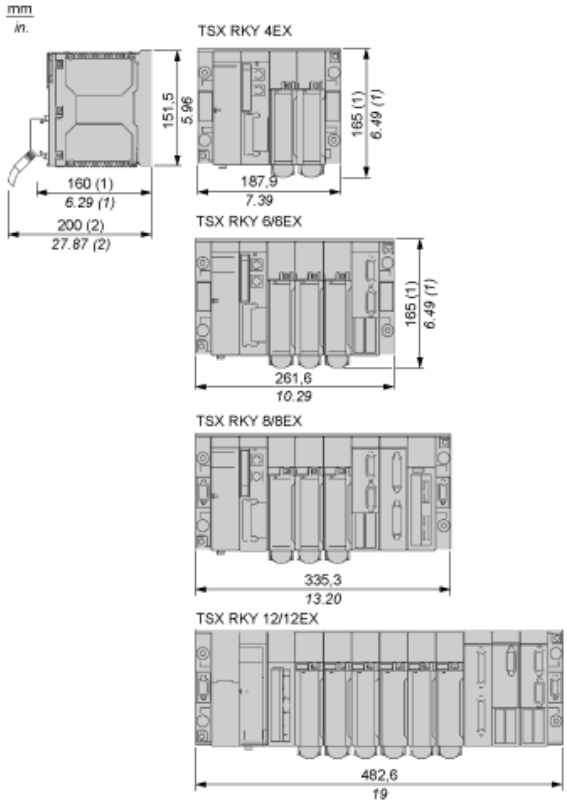


(1) With screw terminal block modules.

(2) Maximum depth for all types of modules and their associated connectors.

## The Safety System

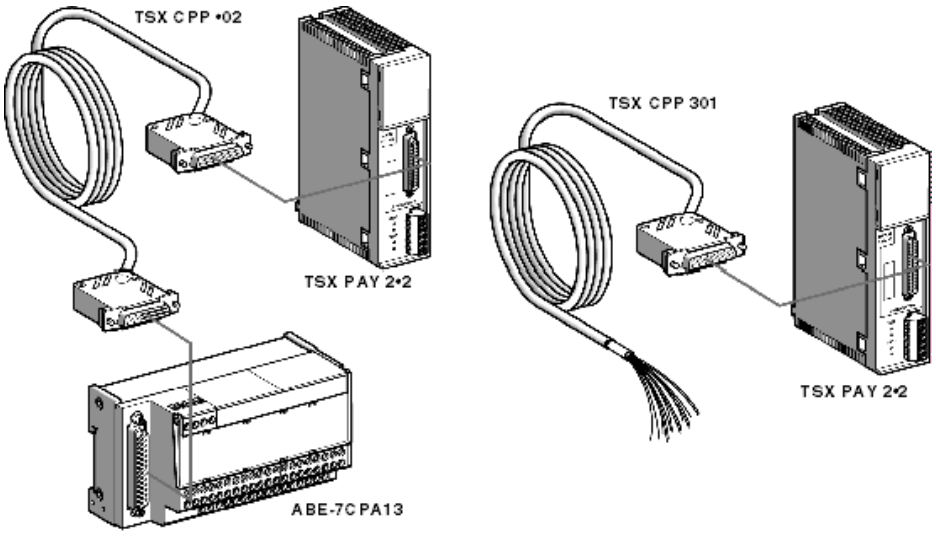


## Connection of Emergency Stop Buttons and Safety Switches

### Double Contacts (recommended)

Double contact wiring of inputs is suitable for applications requiring category 3 or 4 compliant levels of safety.

Short circuits between channels are detected.

ES PB or PS short circuits are detected and pinpointed.

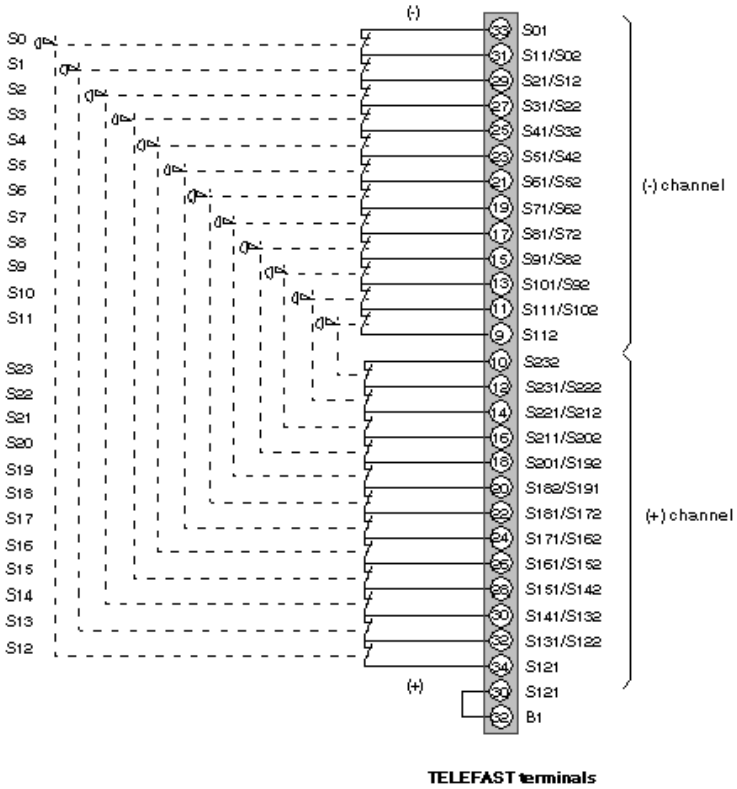


NOTE: If less than 12 double contacts are being used, the input terminals that are not in use must be bridged.

## Single Contact

This wiring is not suitable for applications requiring category 3 or 4 compliant levels of safety.

Not all errors are detected, nor are ES PB or PS short circuits. Here, pressing this PB will not cause the safety circuits to open (loss of the safety function).

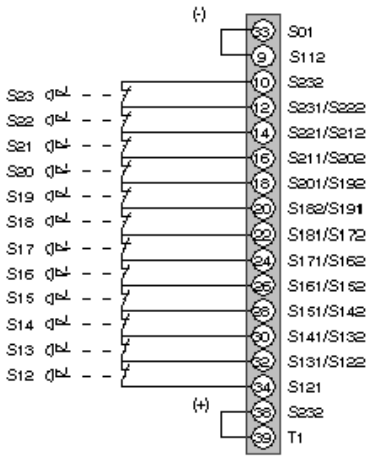


**TELEFAST terminals**

NOTE: If less than 12 contacts are being used, the input terminals that are not in use must be bridged.

## Safety Output Wiring Diagrams

### Feedback Loop Connection

The category 4 immediate stop system design requires supply shut-off device redundancy and activation monitoring.

Wiring of open contacts (K3, K4) or (K3, K4, K5, K6) allows every activation request to be checked.

It is compulsory for the contacts of relays (K3, K4) or (K3, K4, K5, K6) to be mechanically linked.

Category 3 wiring means:

- no wiring of auxiliary contacts in the feedback loop (a strap links terminals Y1 and Y2/S33),
- standard switches, with non-guided contacts, are sufficient.

2-switch set-up (category 4):

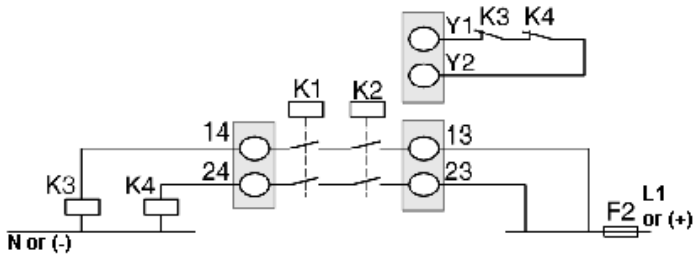


4-switch set-up (category 4):

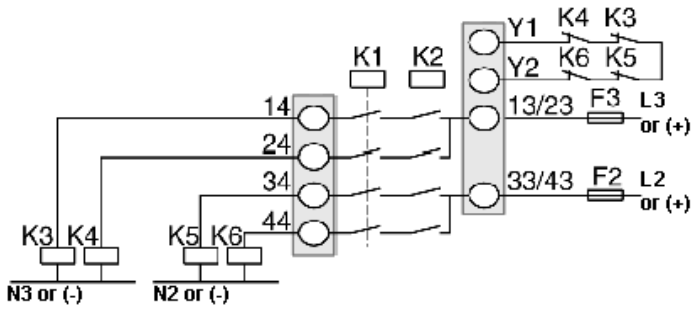


## Connection of the Safety System Reactivation Function

## Wiring Diagram for Automatic Reactivation

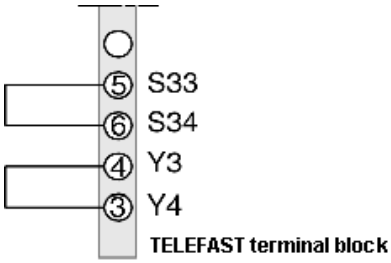


## Wiring Diagrams for Manual Reactivation

With Reactivation button monitoring (recommended):

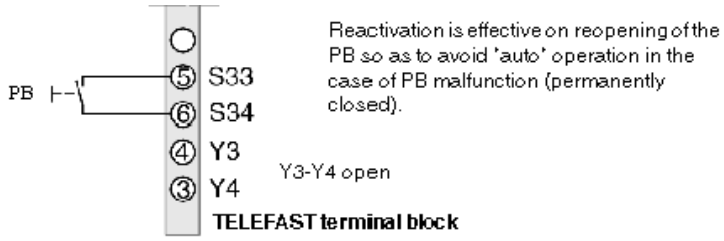


Without Reactivation button monitoring:

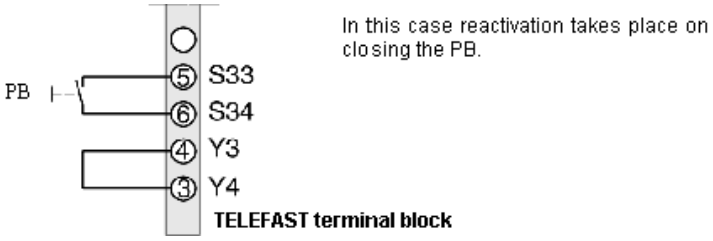


## Safety Outputs

## Wiring Diagram

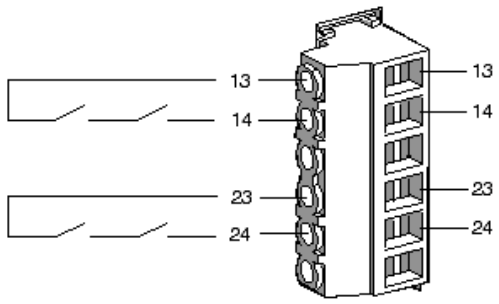


13, 23: Independent supply inputs

14, 24: Safety outputs

NOTE:

Wires cross-section:

- with termination: 2 x 1 $mm^2$/16 AWG or 1 x 1.5 $mm^2$/14 AWG
- without termination: 1 x 2.5 $mm^2$/12 AWG