TYPE YSV

HYLINK™

Uninsulated Butt Splice

HYLINK™ Type YSV seamless splice connector is used to splice stranded and solid copper conductors in virtually all heavy duty industrial and general purpose applications.

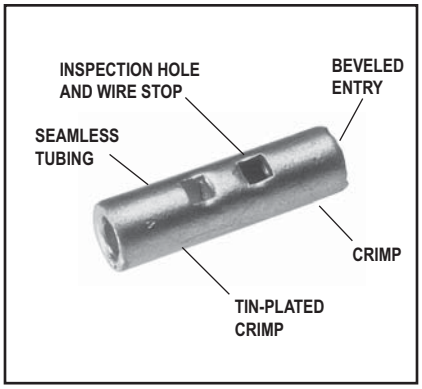

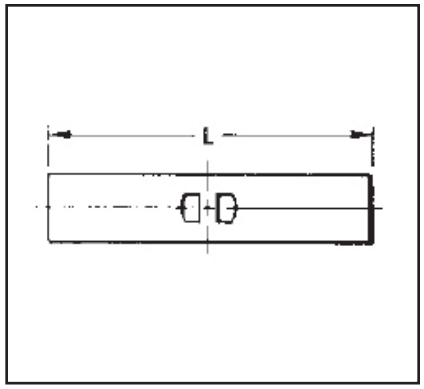

Features & Benefits

- Manufactured from seamless tubing
  - ◊ A high quality design with no seams to split
- Electrolytic copper
  - ◊ Provides maximum conductivity, low resistance and ductility for excellent crimp forming properties
- Electro-tin plated
  - ◊ Provides durable long lasting resistance to corrosion
- Positive center wire stops
  - ◊ Provides proper depth of wire insertion
- Marked with wire size
  - ◊ Provides easy wire size identification
- The HYLINK™ splice connectors have inspection holes
  - ◊ Provides easy visual inspection for proper wire insertion

Catalog Number	Wire Range	L	Bulk Catalog Number	Installation Tooling	Wire Strip Length
YSV18BOX	22 - 18	0.62	**YSV18**	Non-Ratchet: Y10D, Y1022 Ratchet: MRE1022B, MR20, Y8MRB-1, MR8-9Q*, MR8-G98	1/4"
YSV14BOX	20 - 14	0.64	**YSV14**		1/4"
YSV10BOX	12 - 10	0.75	**YSV10**		5/16"

* Remove stop plate.

Blue highlighted items are industry standard and most frequently ordered.

TYPE YSV-L

HYLINK™

Uninsulated Butt Splice
#8 Through 4/0 Copper

HYLINK™ Type YSV-L seamless splice connector is used to splice Type AN aircraft cables plus commercial stranded and solid AWG conductors. Suitable for aircraft, light duty industrial and general purpose applications.

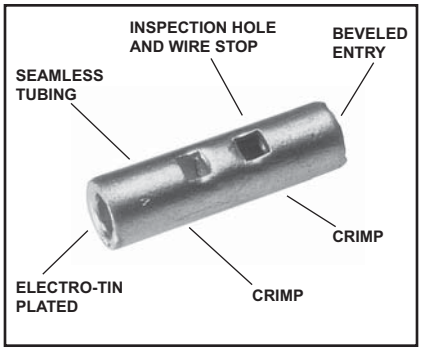

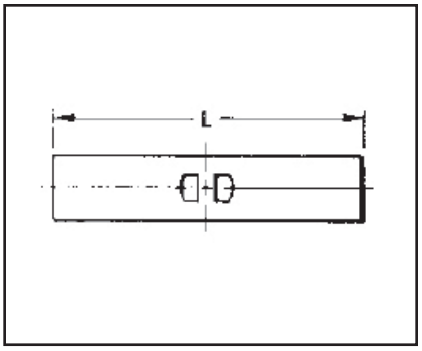

Features & Benefits

- Manufactured from seamless tubing
  - ◊ A high quality design with no seams to split
- Electrolytic copper
  - ◊ Provides maximum conductivity, low resistance and ductility for excellent crimp forming properties
- Electro-tin plated
  - ◊ Provides durable long lasting resistance to corrosion
  - ◊ Provides proper depth of wire insertion
- Marked with wire size
  - ◊ Provides easy wire size identification
- The HYLINK™ splice connectors have inspection holes
  - ◊ Provides easy visual inspection for proper wire insertion

Catalog Number	Wire Range Aircraft-AN Comm'l-AWG Str. & Sol.	Dimensions L	Bulk Catalog Number	Installation Tooling				Wire Strip Length
				Ratchet	HYTOOL™ **	HYPRESS™ • Y35, Y35BH, Y39, Y39BH*		
						Nest	Indentor	
YSV8C-LBOX	8 AWG	1.00	**YSV8CL**	MR89Q, Y8MRB-1, Y1MRTC	MY28 (for Type AH Aircraft Cable); All others: MY29-3, MY29-11 1 Crimp	UV8L	Y34PL	7/16"
YSV6C-LBOX	6 AWG	1.12	**YSV6CL**	Y1MRTC, MR4C		UV6L	Y34PLA	5/8"
YSV4C-LBOX	4 AWG	1.12	**YSV4CL**	Y1MRTC, MR4C		UV4L	Y34PLA	5/8"
YSV2C-LBOX	2 AWG	1.41	**YSV2CL**	Y1MRTC		UV2L	Y34PLA	5/8"
YSV1C-LBOX	1 AWG	1.46	**YSV1CL**	—		UV1L	Y34PLA	5/8"
YSV25-LBOX	1/0 AWG	1.53	**YSV25L**	—		UV25L	Y34PA	11/16"
YSV26-LBOX	2/0 AWG	1.78	**YSV26L**	—		UV26L	Y34PA	13/16"
YSV27-LBOX	3/0 AWG	1.81	**YSV27L**	—		UV27L	Y34PA	13/16"
YSV28-LBOX	4/0 AWG	1.94	**YSV28L**	—		UV28L	Y34PA	7/8"

* Remove stop plate
• Use Y35P3 Indentor Adaptor.
** Bench Mount Adaptor - Cat. No. BMY-BCH-MT is available for Type MY HYTOOLS™.

Blue highlighted items are industry standard and most frequently ordered.