Product data sheet
Characteristics

BCH2LD0232CF5C
servo motor BCH, 60mm, 200W, w oil seal, smooth, brake, leads con

Main

Range compatibility	Lexium 28
Product or component type	Servo motor
Device short name	BCH2

Complementary

Maximum mechanical speed	5000 rpm
[Us] rated supply voltage	220 V
Phase	Single phase Three phase
Continuous stall current	1.11 A
Continuous stall torque	5.66 Lbf.In (0.64 N.m) LXM28... 1.5 A, 220 V, single phase 5.66 Lbf.In (0.64 N.m) LXM28... 1.5 A, 220 V, three phase 5.66 lbf.in (0.64 N.m) LXM28... 3.6 A, 110 V, single phase
Continuous power	200 W
Peak stall torque	16.99 Lbf.In (1.92 N.m) LXM28... 1.5 A, 220 V, single phase 16.99 Lbf.In (1.92 N.m) LXM28... 1.5 A, 220 V, three phase 16.99 lbf.in (1.92 N.m) LXM28... 3.6 A, 110 V, single phase
Nominal output power	200 W LXM28... 1.5 A, 220 V, single phase 200 W LXM28... 1.5 A, 220 V, three phase 200 W LXM28... 3.6 A, 110 V, single phase
Nominal torque	5.66 Lbf.In (0.64 N.m) LXM28... 1.5 A, 220 V, single phase 5.66 Lbf.In (0.64 N.m) LXM28... 1.5 A, 220 V, three phase 5.66 lbf.in (0.64 N.m) LXM28... 3.6 A, 110 V, single phase
Nominal speed	3000 rpm LXM28... 1.5 A, 220 V, single phase 3000 rpm LXM28... 1.5 A, 220 V, three phase 3000 rpm LXM28... 3.6 A, 110 V, single phase
Maximum current Irms	4.31 A LXM28... 0.2 kW, 220 V 4.31 A LXM28... 0.2 kW, 110 V
Maximum permanent current	1.3 A
Product compatibility	LXM28... servo drive 0.2 kW, 220 V, single phase LXM28... servo drive 0.2 kW, 220 V, three phase LXM28... servo drive 0.2 kW, 110 V, single phase
Shaft end	Smooth shaft
Shaft diameter	0.55 in (14 mm)
Shaft length	1.18 in (30 mm)
Feedback type	20 bits single turn absolute encoder
Holding brake	With
Holding torque	11.51 lbf.in (1.3 N.m) built-in
Mounting support	Asian standard flange
Motor flange size	2.36 in (60 mm)
Electrical connection	Free lead
Torque constant	0.58 N.m/A 68 °F (20 °C)
Back emf constant	35 V/krpm 68 °F (20 °C)
Rotor inertia	0.17 kg.cm²

The information provided in this documentation contains general descriptions and/or technical characteristics of the performance of the products contained herein.
This documentation is not intended as a substitute for and is not to be used for determining suitability or reliability of these products for specific user applications.
It is the duty of any such user or integrator to perform the appropriate and complete risk analysis, evaluation and testing of the products with respect to the relevant specific application or use thereof.
Neither Schneider Electric Industries SAS nor any of its affiliates or subsidiaries shall be responsible or liable for misuse of the information contained herein.

Stator resistance	12.2 Ohm 68 °F (20 °C)
Stator inductance	22.5 mH 68 °F (20 °C)
Stator electrical time constant	1.84 ms 68 °F (20 °C)
Maximum radial force Fr	200 N 3000 rpm
Maximum axial force Fa	70 N
Brake pull-in power	11.2 W
Type of cooling	Natural convection
Length	5.51 in (140 mm)
Number of motor stacks	1
Centring collar diameter	1.97 in (50 mm)
Centring collar depth	0.22 in (5.5 mm)
Number of mounting holes	4
Mounting holes diameter	0.22 in (5.5 mm)
Circle diameter of the mounting holes	2.76 in (70 mm)
Distance shaft shoulder-flange	0.22 in (5.5 mm)
Net Weight	3.31 lb(US) (1.5 kg)

Environment

IP degree of protection	IP50 IM V3 IP65 IM B5, IM V1
Ambient air temperature for operation	32…104 °F (0…40 °C)

Ordering and shipping details

Category	18281 - LEXIUM 23/28 MOTORS
Discount Schedule	PC53
GTIN	03606480733536
Nbr. of units in pkg.	1
Package weight(Lbs)	1 lb(US) (0.45 kg)
Returnability	No
Country of origin	CN

Packing Units

Unit Type of Package 1	PCE
Package 1 Height	4.37 in (11.1 cm)
Package 1 width	5.71 in (14.5 cm)
Package 1 Length	10.43 in (26.5 cm)

BCH2LD0232CF5C

Dimensions

Dimensions of Motor

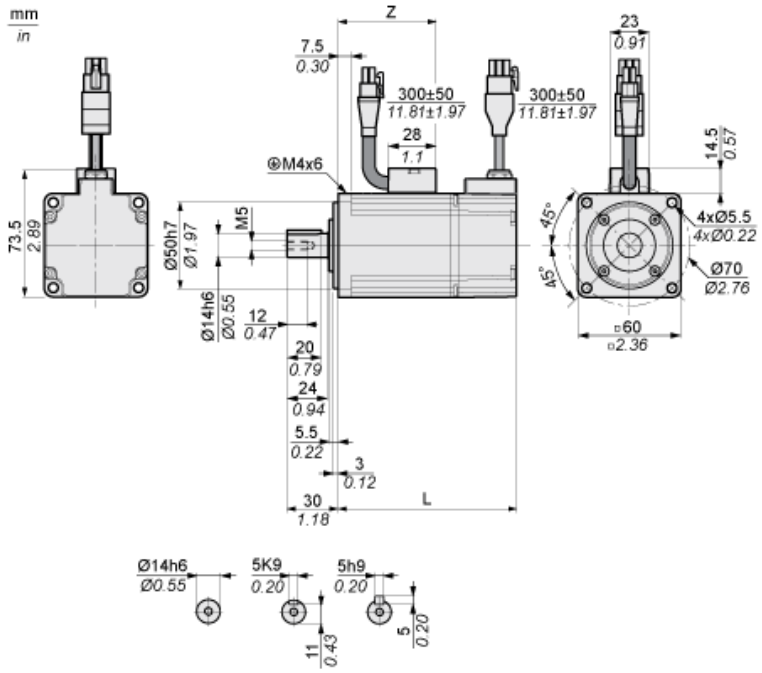

	mm	in.
L (without holding brake)	104	4.09
L (with holding brake)	140	5.51
Z	57	2.24

BCH2LD0232CF5C

Torque/Speed Curves with 230 V Single/Three Phase Supply Voltage

Servo Motor with LXM28AU02●●● Servo Drive

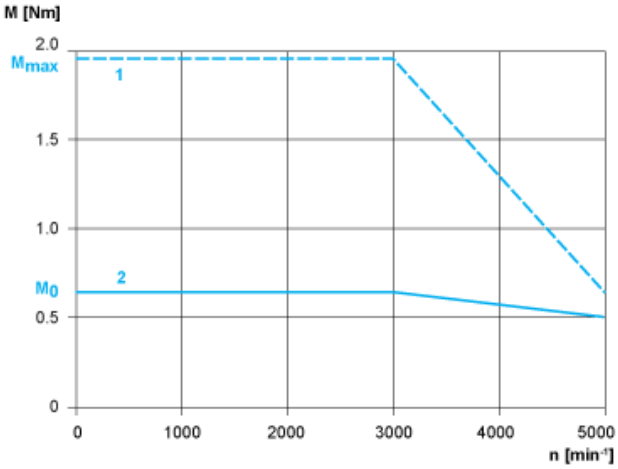

1 : Peak torque
2 : Continuous torque