Product data sheet
Characteristics

XAPE301
Drilled front plate, Harmony XAP, XB2 SL, metal, 1 cut out, 72x72mm, 22mm

Main

Range of Product	Harmony XAP
Product or Component Type	Front plate with fixing screws
Device short name	XAPE
Product destination	For Ø 22 mm control and signalling units
Product front plate size	72 x 72 mm
Number of cut-out	1 cut-out
Material	Anodised aluminium
Device mounting	Flush
IP degree of protection	IP65 IEC 60529 IP657 NF C 20-010
Resistance to chemical agents	Good resistant to acetone Good resistant to alcohols Good resistant to chloride and fluoride solvents Good resistant to diluted mineral acids Good resistant to oils and petrol Good resistant to organic acids Good resistant to salts

Complementary

Net Weight	0.11 lb(US) (0.05 kg)

Environment

Protective treatment	TH TC
Ambient Air Temperature for Storage	-40…158 °F (-40…70 °C)
Ambient Air Temperature for Operation	-13…158 °F (-25…70 °C)
Overvoltage category	Class I IEC 60536 Class I NF C 20-030

Ordering and shipping details

Category	22475-WALL STATIONS
Discount Schedule	CS2
GTIN	3389110628005
Returnability	Yes
Country of origin	FR

Packing Units

Unit Type of Package 1	PCE
Number of Units in Package 1	1
Package 1 Height	1.06 in (2.7 cm)
Package 1 Width	5.08 in (12.9 cm)
Package 1 Length	6.14 in (15.6 cm)
Package 1 Weight	2.26 oz (64 g)
Unit Type of Package 2	S02
Number of Units in Package 2	30
Package 2 Height	5.91 in (15 cm)
Package 2 Width	11.81 in (30 cm)

The information provided in this documentation contains general descriptions and/or technical characteristics of the performance of the products contained herein.
This documentation is not intended as a substitute for and is not to be used for determining suitability or reliability of these products for specific user applications.
It is the duty of any such user or integrator to perform the appropriate and complete risk analysis, evaluation and testing of the products with respect to the relevant specific application or use thereof.
Neither Schneider Electric Industries SAS nor any of its affiliates or subsidiaries shall be responsible or liable for misuse of the information contained herein.

Package 2 Length	15.75 in (40 cm)
Package 2 Weight	5.31 lb(US) (2.408 kg)
Unit Type of Package 3	P06
Number of Units in Package 3	240
Package 3 Height	17.72 in (45 cm)
Package 3 Width	31.50 in (80 cm)
Package 3 Length	23.62 in (60 cm)
Package 3 Weight	61.21 lb(US) (27.764 kg)

Offer Sustainability

Sustainable offer status	Green Premium product
California proposition 65	WARNING: This product can expose you to chemicals including: Di-isodecyl phthalate (DIDP), which is known to the State of California to cause birth defects or other reproductive harm. For more information go to www.P65Warnings.ca.gov
REACh Regulation	REACh Declaration
REACh free of SVHC	Yes
EU RoHS Directive	Pro-active compliance (Product out of EU RoHS legal scope) EU RoHS Declaration
Toxic heavy metal free	Yes
Mercury free	Yes
China RoHS Regulation	China RoHS Declaration
RoHS exemption information	Yes
Environmental Disclosure	Product Environmental Profile
Circularity Profile	No need of specific recycling operations

Contractual warranty

Warranty	18 months

XAPE301

Dimensions and Fixing

Below drawing shows a front plate with 4 cut-outs. Refer to the product characteristics to get the number of cut-outs.

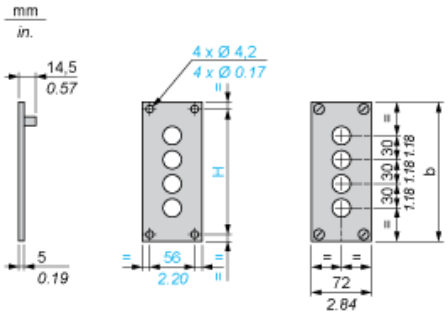

Panel cut-out

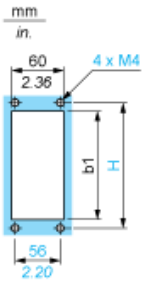

b		b1		H	
mm	in.	mm	in.	mm	in.
72	2.83	44	1.73	56	2.20