Product data sheet
Characteristics

170ADM37010C
discrete I/O module Modicon Momentum - Conformal coating - 16I / 8O solid state

Main

Range of product	Modicon Momentum automation platform
Product or component type	Discrete solid state I/O base DC
Group of channels	4 groups of 4 inputs 2 groups of 4 outputs
Discrete input number	16 IEC 1131-2 Type 1
Discrete input logic	Positive
Discrete input voltage	24 V DC
Discrete output number	8
Discrete output type	Solid state switch
Discrete output voltage	<= 30 V DC 24 V DC
Discrete output logic	Positive
Protective treatment	Conformal coating Humiseal 1A33

Complementary

[Us] rated supply voltage	24 V DC
Input voltage limits	- 3...30 V
Network frequency	47...63 Hz
Voltage state 0 guaranteed	-3...5 V
Voltage state 1 guaranteed	11...30 V
Current state 0 guaranteed	<= 1.2 mA
Current state 1 guaranteed	>= 2.5 mA
Input resistance	4 kOhm
Discrete output current	16 A per module 2 A per point 8 A per group
Maximum leakage current	1 mA 24 V output circuit)
Peak output current	2.8 A
Fault type	Overload on output Short circuit on output
Response time	< 0.1 ms from state 0 to state 1 on output < 0.1 ms from state 1 to state 0 on output 2.2 ms from state 0 to state 1 on input 3.3 ms from state 1 to state 0 on input
Isolation between channels and bus	500 V AC
Power dissipation	<= 10 W 6.5 W
Marking	CE

The information provided in this documentation contains general descriptions and/or technical characteristics of the performance of the products contained herein.
This documentation is not intended as a substitute for and is not to be used for determining suitability or reliability of these products for specific user applications.
It is the duty of any such user or integrator to perform the appropriate and complete risk analysis, evaluation and testing of the products with respect to the relevant specific application or use thereof.
Neither Schneider Electric Industries SAS nor any of its affiliates or subsidiaries shall be responsible or liable for misuse of the information contained herein.

Terminals description PLC n°1	(12)IN_DIS#12 TB (4)IN_DIS#4 (10)IN_DIS#10 (5)IN_DIS#5 (6)IN_DIS#6 (9)IN_DIS#9 (11)IN_DIS#11 (16)IN_DIS#16 (7)IN_DIS#7 (8)IN_DIS#8 (15)IN_DIS#15 (13)IN_DIS#13 (M-)PW_NEG (3)IN_DIS#3 (2)IN_DIS#2 (L+)PW_POS (1)IN_DIS#1 (14)IN_DIS#14
Terminals description PLC n°2	(4)OUT_DIS#4 (3)OUT_DIS#3 (2L+)PW_POS (8)OUT_DIS#8 (6)OUT_DIS#6 (5)OUT_DIS#5 (1)OUT_DIS#1 (1L+)PW_POS (7)OUT_DIS#7 TB_1 (2)OUT_DIS#2
Current consumption	250 mA 24 V DC
Depth	1.87 in (47.5 mm)
Height	5.57 in (141.5 mm)
Maximum Width	4.92 in (125 mm)
Net Weight	0.49 lb(US) (0.22 kg)

Environment

Product certifications	UL CSA
Resistance to electrostatic discharge	4 KV contact IEC 801-2 8 kV on air IEC 801-2
Resistance to electromagnetic fields	10 V/m 80...1000 MHz conforming to IEC 801-3
Ambient air temperature for operation	32…140 °F (0…60 °C)
Ambient air temperature for storage	-40…185 °F (-40…85 °C)
Relative humidity	95 % without condensation
Operating altitude	<= 16404.2 ft (5000 m)

Ordering and shipping details

Category	18206 - MOMENTUM PROCESSORS,I/O BASES,CONN.
Discount Schedule	PC31
GTIN	03595863798326
Nbr. of units in pkg.	1
Package weight(Lbs)	2.21 lb(US) (1.00 kg)
Returnability	No
Country of origin	ID

Packing Units

Package 1 Height	2.17 in (55.000 mm)
Package 1 width	7.09 in (180.000 mm)
Package 1 Length	10.24 in (260.000 mm)

Offer Sustainability

Sustainable offer status	Green Premium product
California proposition 65	WARNING: This product can expose you to chemicals including: Lead and lead compounds, which is known to the State of California to cause cancer and birth defects or other reproductive harm. For more information go to www.P65Warnings.ca.gov
REACh Regulation	REACh Declaration
EU RoHS Directive	Pro-active compliance (Product out of EU RoHS legal scope) EU RoHS Declaration
Mercury free	Yes
RoHS exemption information	Yes
China RoHS Regulation	China RoHS Declaration
Environmental Disclosure	Product Environmental Profile
Circularity Profile	End Of Life Information
WEEE	The product must be disposed on European Union markets following specific waste collection and never end up in rubbish bins.

Contractual warranty

Warranty	18 months

170ADM37010C

Standard Adapter on a Typical Base

Dimensions

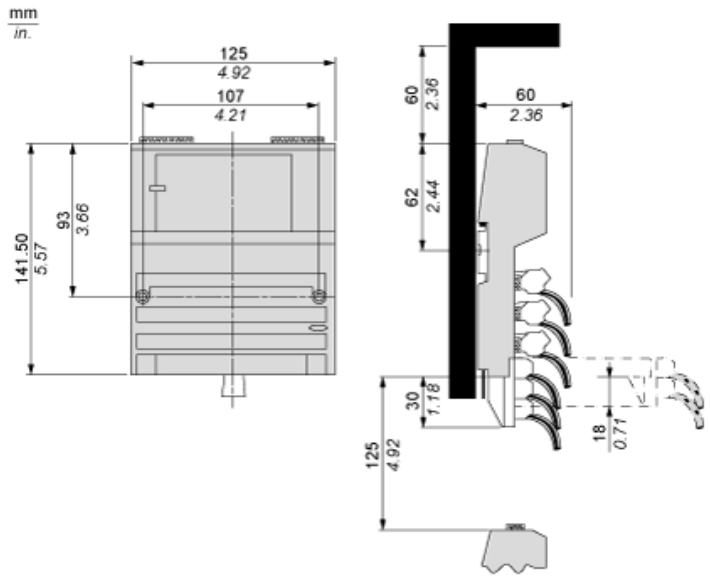

Mounting on a Wall

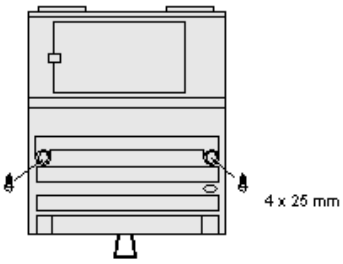

External Wiring Diagrams

2-Wire Devices

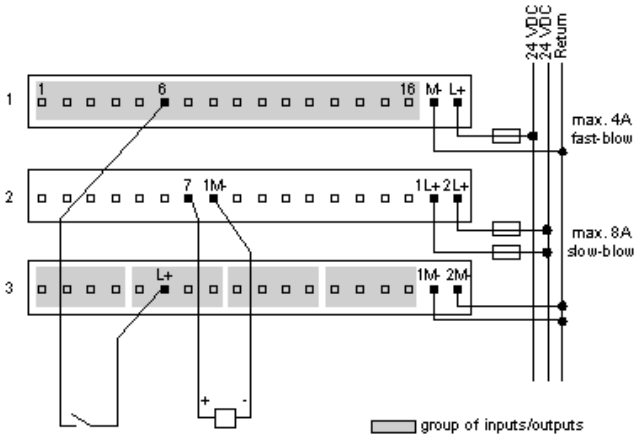

Sensor Activated by Output

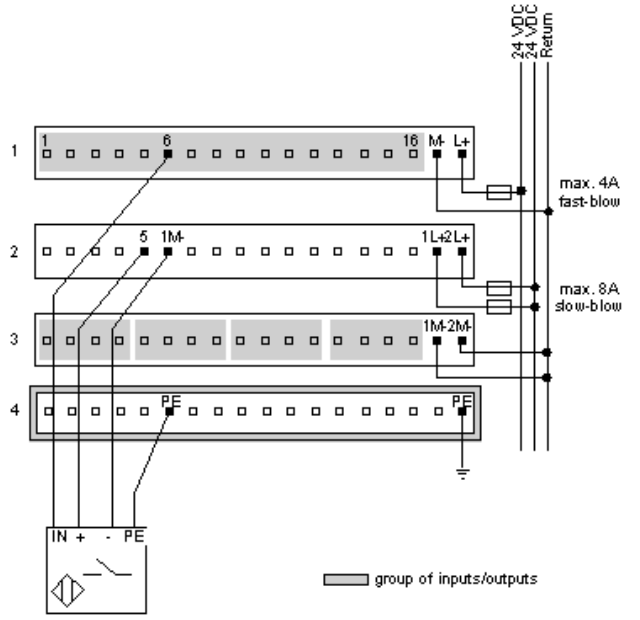

Four-Wire Sensor with a Two-Wire Actuator

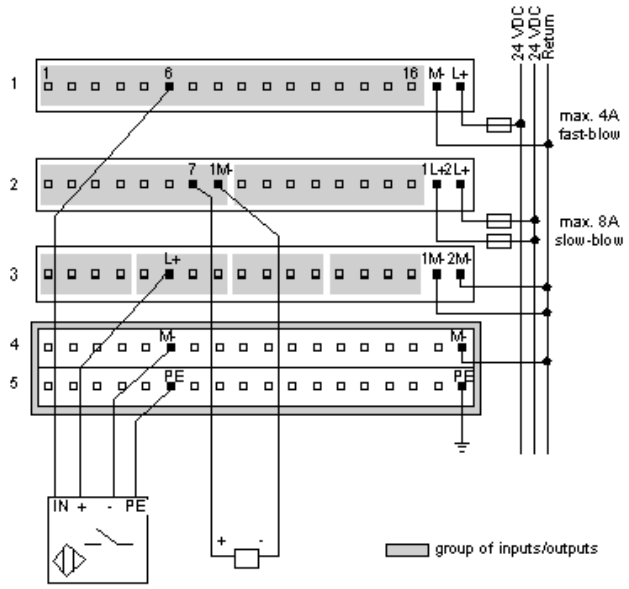

Broken Wire Detection

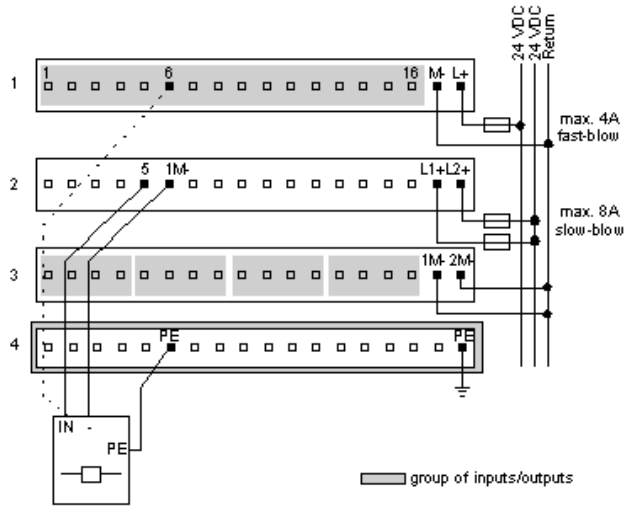

Internal Pin Connections
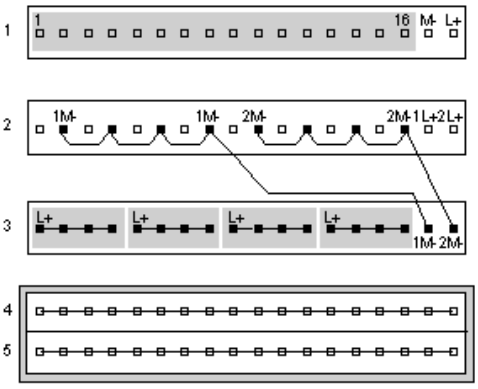
Rows 1 through 3 show the internal connections between terminals on the I/O base. Rows 4 through 5 show the internal connections on the optional busbar.