Product data sheet
Characteristics

9001KS63FB
Selector switch head, Harmony 9001K, metal, long handle, black, 30mm, 3 positions, spring return left to center

Main

Range of Product	Harmony 9001K
Product or Component Type	Head for selector switch
Device short name	9001K
Type of operator	Left to centre spring return
Operator profile	Black long handle

Complementary

Bezel material	Metal
Mounting diameter	1.18 in (30 mm)
Net Weight	0.38 lb(US) (0.172 kg)
Shape of signaling unit head	Octagonal
Operator position information	3 positions
Contacts type and composition	Without contact block
Mechanical durability	500000 cycles
Product compatibility	9001KA1 side 1 or 2
Device presentation	Basic element
Cap/operator or lens colour	Black
Operator profile	Long handle
Type of operator	Spring return
Size	30 mm
Return	Left to centre
Cam profile	3

Environment

Protective treatment	TC
Ambient Air Temperature for Storage	-40…158 °F (-40…70 °C)
Ambient Air Temperature for Operation	-13…158 °F (-25…70 °C)
Overvoltage category	Class II IEC 61140
IP degree of protection	IP66 IEC 60529
NEMA degree of protection	NEMA 1 NEMA 12 NEMA 13 NEMA 2 NEMA 3 NEMA 3R NEMA 4
Standards	EN/IEC 60947-1 CSA C22.2 No 14 EN/IEC 60947-5-4 JIS C 852 JIS C 4520 UL 508 EN/IEC 60947-5-1

The information provided in this documentation contains general descriptions and/or technical characteristics of the performance of the products contained herein.
This documentation is not intended as a substitute for and is not to be used for determining suitability or reliability of these products for specific user applications.
It is the duty of any such user or integrator to perform the appropriate and complete risk analysis, evaluation and testing of the products with respect to the relevant specific application or use thereof.
Neither Schneider Electric Industries SAS nor any of its affiliates or subsidiaries shall be responsible or liable for misuse of the information contained herein.

Product Certifications	UL 508[RETURN]NEMA
Vibration resistance	7 gn 2…500 Hz)IEC 60068-2-6
Shock resistance	50 gn IEC 60068-2-27

Ordering and shipping details

Category	21426-9001 K (NOT KA,KM,KX)
Discount Schedule	CS1
GTIN	785901035435
Returnability	Yes
Country of origin	MX

Packing Units

Unit Type of Package 1	PCE
Number of Units in Package 1	1
Package 1 Height	2.00 in (5.08 cm)
Package 1 Width	2.80 in (7.112 cm)
Package 1 Length	2.50 in (6.35 cm)
Package 1 Weight	4.48 oz (127.006 g)

Offer Sustainability

Sustainable offer status	Green Premium product
California proposition 65	WARNING: This product can expose you to chemicals including: Nickel compounds, which is known to the State of California to cause cancer, and Di-isodecyl phthalate (DIDP), which is known to the State of California to cause birth defects or other reproductive harm. For more information go to www.P65Warnings.ca.gov
REACh Regulation	REACh Declaration
EU RoHS Directive	Pro-active compliance (Product out of EU RoHS legal scope)
Mercury free	Yes
China RoHS Regulation	China RoHS Declaration
RoHS exemption information	Yes
Environmental Disclosure	Product Environmental Profile
Circularity Profile	No need of specific recycling operations
WEEE	The product must be disposed on European Union markets following specific waste collection and never end up in rubbish bins.

Contractual warranty

Warranty	18 months

9001KS63FB

Dimensions

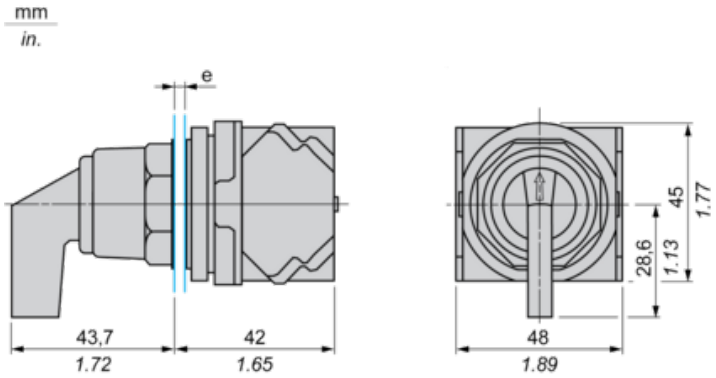

e panel thickness: 1 to 6 mm / 0.04 to 0.24 in.

Contact Block Mounting Position

Top and Rear views

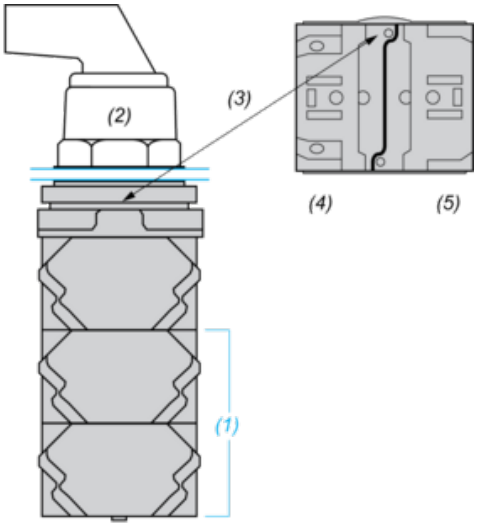

(1) It is possible to mount up to 3 levels of contacts blocks (maximum of 6 contacts blocks)
(2) Operator
(3) Locating notch
(4) Side 1
(5) Side 2

Panel Cut-Out

Clearance

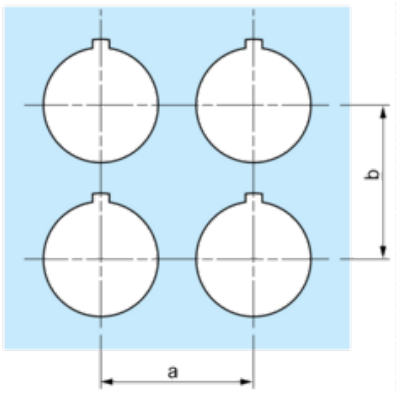

Legend plate	a min.		b min.	
	mm	in.	mm	in.
9001KN2••	57.2	2.25	44.5	1.75
9001KN3••	57.2	2.25	50.8	2.00

Individual Cut-outs Details

2 alternatives

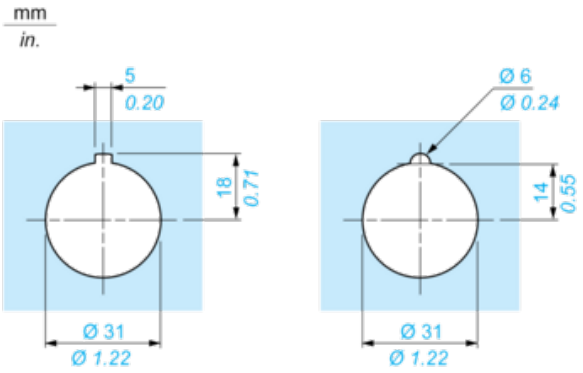
mm
in.
5
0.20
18
0.71
Ø 31
Ø 1.22
Ø 6
Ø 0.24
14
0.55
Ø 31
Ø 1.22