Product data sheet
Characteristics

TM3AI8
analog input module, Modicon TM3, 8 inputs, screw, 24V DC

Main

Range of Product	Modicon TM3
Product or Component Type	Analog input module
Range Compatibility	Modicon M221 Modicon M241 Modicon M251 Modicon M262
Analogue input number	8
Analogue input type	Current 4...20 mA Current 0...20 mA Voltage 0...10 V Voltage - 10...10 V

Complementary

Analogue input resolution	12 bits 11 bits + sign
Permissible continuous overload	13 V voltage 40 mA current
Input impedance	<= 50 Ohm current >= 1 MOhm voltage
LSB value	2.44 mV 0...10 V voltage 4.88 mV - 10...10 V voltage 4.88 µA 0...20 mA current 3.91 µA 4...20 mA current
Conversion time	1 ms + 1 ms per channel + 1 controller cycle time
Sampling duration	1 ms
Absolute accuracy error	+/- 1 % of full scale +/- 0.2 % of full scale at 77 °F (25 °C)
Temperature Drift	+/- 0.01 %FS/°C
Repeat accuracy	+/-0.5 %FS
Non-linearity	+/- 0.2 %FS
Cross talk	<= 1 LSB
[Us] rated supply voltage	24 V DC
Supply voltage limits	20.4…28.8 V
Type of cable	Twisted shielded pairs cable <98.43 ft (30 m) input
Current consumption	40 mA 5 V DC via bus connector full load 35 mA 5 V DC via bus connector no load 30 mA 24 V DC via external supply no load 40 mA 24 V DC via external supply full load
Local signalling	For PWR 1 LED (green)
Electrical connection	10 x 1.5 mm² removable screw terminal block pitch 3.81 mm for inputs and supply 10 x 1.5 mm² removable screw terminal block pitch 3.81 mm for inputs
Insulation	Between input and supply 1500 V AC Between input and internal logic 500 V AC
Marking	CE
Surge withstand	1 KV power supply common mode IEC 61000-4-5 0.5 KV power supply differential mode IEC 61000-4-5 1 kV input common mode IEC 61000-4-5
Mounting support	Top hat type TH35-15 rail IEC 60715 Top hat type TH35-7.5 rail IEC 60715 Plate or panel with fixing kit
Height	3.54 in (90 mm)

The information provided in this documentation contains general descriptions and/or technical characteristics of the performance of the products contained herein.
This documentation is not intended as a substitute for and is not to be used for determining suitability or reliability of these products for specific user applications.
It is the duty of any such user or integrator to perform the appropriate and complete risk analysis, evaluation and testing of the products with respect to the relevant specific application or use thereof.
Neither Schneider Electric Industries SAS nor any of its affiliates or subsidiaries shall be responsible or liable for misuse of the information contained herein.

Depth	2.76 in (70 mm)
Width	0.93 in (23.6 mm)
Net Weight	0.24 lb(US) (0.11 kg)

Environment

Standards	IEC 61131-2
Product Certifications	CE[RETURN]UKCA[RETURN]RCM[RETURN]EAC[RETURN]cULus[RETURN]cULus HazLoc
Resistance to electrostatic discharge	8 KV in air IEC 61000-4-2 4 kV on contact IEC 61000-4-2
Resistance to electromagnetic fields	9.14 V/M (10 V/m) 80 MHz...1 GHz IEC 61000-4-3 2.74 V/M (3 V/m) 1.4 GHz...2 GHz IEC 61000-4-3 0.91 V/m (1 V/m) 2 GHz...3 GHz IEC 61000-4-3
Resistance to magnetic fields	98.43 A/m (30 A/m) IEC 61000-4-8
Resistance to fast transients	1 kV IEC 61000-4-4 I/O)
Resistance to conducted disturbances	10 V 0.15...80 MHz IEC 61000-4-6 3 V spot frequency (2, 3, 4, 6.2, 8.2, 12.6, 16.5, 18.8, 22, 25 MHz) Marine specification (LR, ABS, DNV, GL)
Electromagnetic emission	Radiated emissions 40 dBµV/m QP class A 10 m)30…230 MHz IEC 55011 Radiated emissions 47 dBµV/m QP class A 10 m)230…1000 MHz IEC 55011
Immunity to microbreaks	10 ms
Ambient Air Temperature for Operation	14…131 °F (-10…55 °C) horizontal installation 14…95 °F (-10…35 °C) vertical installation
Ambient Air Temperature for Storage	-13…158 °F (-25…70 °C)
Relative humidity	10…95 %, without condensation in operation) 10…95 %, without condensation in storage)
IP Degree of Protection	IP20
Pollution degree	2
Operating altitude	0...6561.68 ft (0...2000 m)
Storage altitude	0.00…9842.52 ft (0…3000 m)
Vibration resistance	3.5 mm 5…8.4 Hz DIN rail 3 gn 8.4…150 Hz DIN rail
Shock resistance	15 gn 11 ms

Ordering and shipping details

Category	22533-M2XX PLC & ACCESSORIES
Discount Schedule	MSX
GTIN	3606480648922
Returnability	Yes
Country of origin	JP

Packing Units

Unit Type of Package 1	PCE
Number of Units in Package 1	1
Package 1 Height	2.90 in (7.368 cm)
Package 1 Width	4.14 in (10.513 cm)
Package 1 Length	4.96 in (12.603 cm)
Package 1 Weight	7.64 oz (216.5 g)
Unit Type of Package 2	S04
Number of Units in Package 2	42
Package 2 Height	11.81 in (30 cm)
Package 2 Width	15.75 in (40 cm)
Package 2 Length	23.62 in (60 cm)
Package 2 Weight	22.05 lb(US) (10.0 kg)
Unit Type of Package 3	P12
Number of Units in Package 3	504
Package 3 Height	41.34 in (105 cm)
Package 3 Width	47.24 in (120 cm)

Package 3 Length	31.50 in (80 cm)
Package 3 Weight	286.60 lb(US) (130 kg)

Offer Sustainability

Sustainable offer status	Green Premium product
California proposition 65	WARNING: This product can expose you to chemicals including: Lead and lead compounds, which is known to the State of California to cause cancer and birth defects or other reproductive harm. For more information go to www.P65Warnings.ca.gov
REACh Regulation	REACh Declaration
EU RoHS Directive	Pro-active compliance (Product out of EU RoHS legal scope) EU RoHS Declaration
Toxic heavy metal free	Yes
Mercury free	Yes
China RoHS Regulation	China RoHS Declaration
RoHS exemption information	Yes
Environmental Disclosure	Product Environmental Profile
Circularity Profile	End Of Life Information
WEEE	The product must be disposed on European Union markets following specific waste collection and never end up in rubbish bins.
PVC free	Yes

TM3AI8

Dimensions

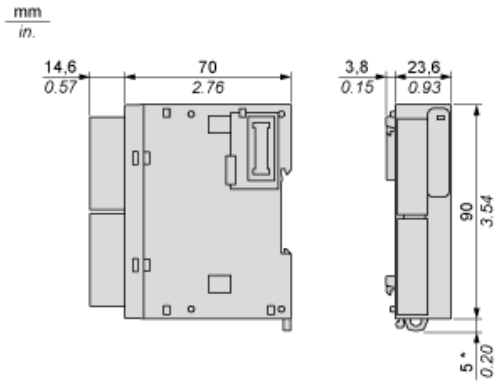

(*) 8.5 mm/0.33 in when the clamp is pulled out.

Spacing Requirements

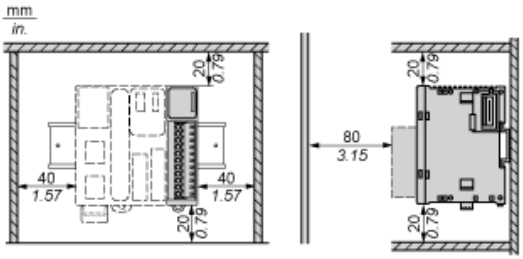

Mounting on a Rail

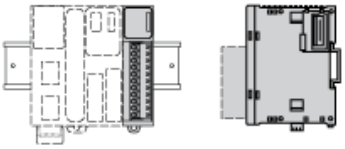

Incorrect Mounting

Mounting on a Panel Surface

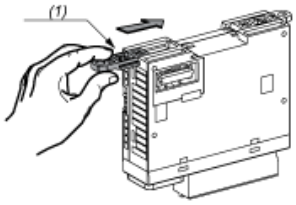

(1) Install a mounting strip

Mounting Hole Layout

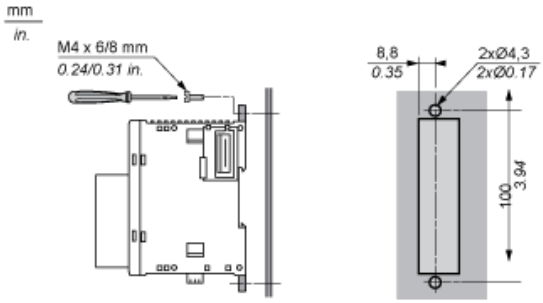

Analogue Input Module

Wiring Diagram (Current / Voltage)

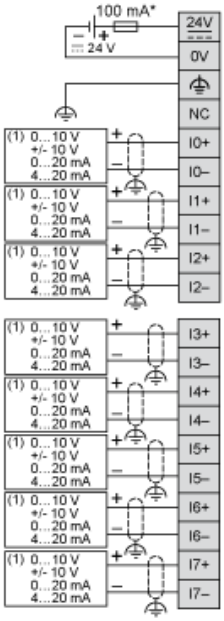

(*) Type T fuse
(1) Current/Voltage analog output device