Product data sheet
Characteristics

ILA2E571TC1F0
integrated drive ILA with servo motor - 24..48 V - EtherCAT - indus connector

Main

Range of Product	Lexium integrated drive
Product or Component Type	Motion integrated drive
Device short name	ILA
Motor Type	AC Synchronous Servo Motor
Number of motor poles	6
Phase	Single phase
[Us] rated supply voltage	48 V 24 V
Network type	DC
Communication interface	EtherCAT, Integrated
Length	7.51 in (190.8 mm)
Winding type	High speed of rotation and medium torque
Electrical Connection	Industrial connector
Holding brake	With
Gear box type	Without
Nominal speed	5000 rpm 24 V 7000 rpm 48 V
Nominal torque	2.74 lbf.in (0.31 N.m)
Holding torque	10.62 lbf.in (1.2 N.m) holding brake

Complementary

Transmission Rate	100 Mbits
Mounting Support	Flange
Motor flange size	2.24 in (57 mm)
Number of motor stacks	1
Centring collar diameter	1.97 in (50 mm)
Centring collar depth	0.06 in (1.6 mm)
Number of mounting holes	4
Mounting holes diameter	0.20 in (5.2 mm)
Circle diameter of the mounting holes	2.62 in (66.6 mm)
Feedback type	Single turn encoder
Shaft end	Untapped
Second shaft	Without second shaft end
Shaft diameter	0.35 in (9 mm)
Shaft length	0.79 in (20 mm)
Supply voltage limits	18…55.2 V
Current consumption	11000 mA peak 7500 mA maximum continuous
Associated fuse rating	16 A
Commissioning interface	RS485 Modbus TCP 9.6, 19.2 and 38.4 kbauds)
Input/output type	4 signals (each be used as input or output)
Voltage state 0 guaranteed	-3...4.5 V
Voltage state 1 guaranteed	15...30 V
Discrete input current	10 MA at 24 V safety input 2 mA at 24 V 24 V signal interface
Discrete output voltage	23...25 V

The information provided in this documentation contains general descriptions and/or technical characteristics of the performance of the products contained herein.
This documentation is not intended as a substitute for and is not to be used for determining suitability or reliability of these products for specific user applications.
It is the duty of any such user or integrator to perform the appropriate and complete risk analysis, evaluation and testing of the products with respect to the relevant specific application or use thereof.
Neither Schneider Electric Industries SAS nor any of its affiliates or subsidiaries shall be responsible or liable for misuse of the information contained herein.

Maximum switching current	100 MA per output 200 mA total
Protection Type	Short circuit of the output voltage Safe torque off Overload of output voltage
Peak stall torque	3.98 lbf.in (0.45 N.m)
Continuous stall torque	2.74 lbf.in (0.31 N.m)
Speed feedback resolution	16384 points/turn
Accuracy error	+/- 0.05 °
Rotor inertia	0.165 kg.cm²
Maximum radial force Fr	89 N
Maximum axial force Fa	104 N force pressure) 104 N tensile force)
Service life in hours	20000 h bearing
Brake pull-in power	10 W
Brake release time	14 ms
Brake application time	13 ms
Marking	CE
Type of cooling	Natural convection
Net Weight	3.09 lb(US) (1.4 kg)

Environment

Standards	IEC 61800-3, Ed 2 EN 50347 EN/IEC 61800-3 IEC 60072-1 EN/IEC 50178 EN 61800-3:2001, second environment EN 61800-3 : 2001-02
Product Certifications	cUL[RETURN]TÜV[RETURN]UL
Ambient air temperature for operation	104…131 °F (40…55 °C) with power derating of 2 % per °C) 32…104 °F (0…40 °C) without derating)
Permissible ambient air temperature around the device	221 °F (105 °C) power amplifier 230 °F (110 °C) motor
Ambient Air Temperature for Storage	-13…158 °F (-25…70 °C)
Operating altitude	<= 3280.84 ft (1000 m) without derating
Relative humidity	15…85 % without condensation
Vibration resistance	20 m/s² 10…500 Hz) 10 cycles EN/IEC 60068-2-6
Shock resistance	150 m/s² 1000 shocks EN/IEC 60068-2-29
IP degree of protection	Shaft bushing IP41 EN/IEC 60034-5 Total except shaft bushing IP54 EN/IEC 60034-5

Ordering and shipping details

Category	18288-LEXIUM INTEGRATED DRIVES II
Discount Schedule	PC56
GTIN	3606485187440
Returnability	No
Country of origin	DE

Packing Units

Unit Type of Package 1	PCE
Number of Units in Package 1	1
Package 1 Height	3.15 in (8.0 cm)
Package 1 Width	7.28 in (18.5 cm)
Package 1 Length	13.98 in (35.5 cm)
Package 1 Weight	4.63 lb(US) (2.1 kg)

Offer Sustainability

Sustainable offer status	Green Premium product
California proposition 65	WARNING: This product can expose you to chemicals including: Lead and lead compounds, which is known to the State of California to cause cancer and birth defects or other reproductive harm. For more information go to www.P65Warnings.ca.gov
REACh Regulation	REACh Declaration
EU RoHS Directive	Pro-active compliance (Product out of EU RoHS legal scope)
Mercury free	Yes
China RoHS Regulation	China RoHS Declaration
RoHS exemption information	Yes
Environmental Disclosure	Product Environmental Profile
Circularity Profile	End Of Life Information
WEEE	The product must be disposed on European Union markets following specific waste collection and never end up in rubbish bins.
PVC free	Yes

Contractual warranty

Warranty	18 months

ILA2E571TC1F0

Integrated Drive with Holding Brake

Dimensions

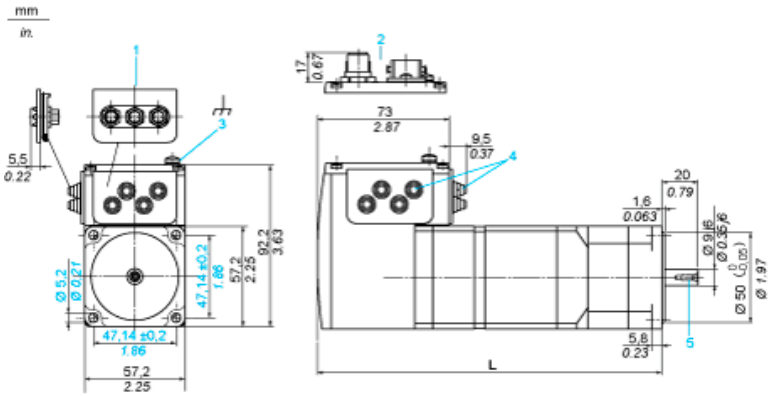

1 Accessories: I/O signal insert with industrial connectors
2 Option: industrial connectors
3 Earth (ground) terminal
4 Accessories: cable entries Ø = 3 ... 9 mm/0.12 ... 0.35 in.
5 Centring hole DIN 332 - DS M3
L 190.8 mm/7.51 in.

ILA2E571TC1F0

Connection Example with 4 I/O Signals

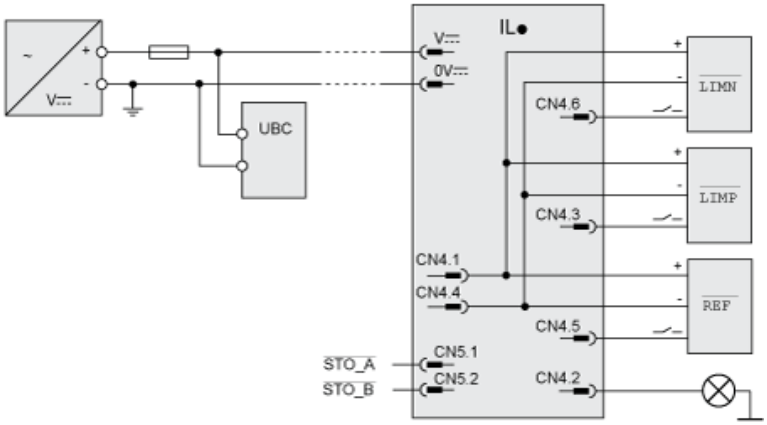

ILA2E571TC1F0

Torque Characteristics

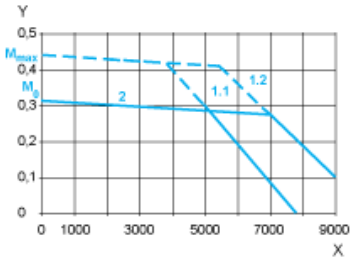

X Speed of rotation in rpm
Y Torque in Nm
1.1 Max. torque at 24 V
1.2 Max. torque at 48 V
2 Continuous torque