Product data sheet
Characteristics

TM171DWAL2U
Modicon M171 Optimized Wall thermostat without backlight

Main

Range of Product	Modicon M171
Product or Component Type	Display module
Display colour	Monochrome
Supply	External source

Complementary

Display Type	LCD screen
Number of key	4
Color	White
[Us] rated supply voltage	12 V DC
Power Consumption in W	5 W 0 W
Marking	CE
Realtime clock	With
Local signalling	LCD display
Product Compatibility	Logic controller M171 optimized
Height	5.39 in (137 mm)
Width	3.80 in (96.5 mm)
Depth	1.23 in (31.3 mm)
Net Weight	0.32 lb(US) (0.143 kg)

Environment

Product Certifications	cURus
IP degree of protection	Front face IP40

Ordering and shipping details

Category	22537-M171 / M172 HVAC CONTROLLERS
Discount Schedule	PC12
GTIN	3606480752667
Returnability	No
Country of origin	IT

Packing Units

Unit Type of Package 1	PCE
Number of Units in Package 1	1
Package 1 Height	3.54 in (9.000 cm)
Package 1 Width	5.12 in (13.000 cm)
Package 1 Length	7.28 in (18.500 cm)
Package 1 Weight	9.14 oz (259.000 g)
Unit Type of Package 2	S02

The information provided in this documentation contains general descriptions and/or technical characteristics of the performance of the products contained herein.
This documentation is not intended as a substitute for and is not to be used for determining suitability or reliability of these products for specific user applications.
It is the duty of any such user or integrator to perform the appropriate and complete risk analysis, evaluation and testing of the products with respect to the relevant specific application or use thereof.
Neither Schneider Electric Industries SAS nor any of its affiliates or subsidiaries shall be responsible or liable for misuse of the information contained herein.

Number of Units in Package 2	6
Package 2 Height	5.91 in (15.000 cm)
Package 2 Width	11.81 in (30.000 cm)
Package 2 Length	15.75 in (40.000 cm)
Package 2 Weight	3.99 lb(US) (1.811 kg)
Unit Type of Package 3	P06
Number of Units in Package 3	96
Package 3 Height	29.53 in (75.000 cm)
Package 3 Width	31.50 in (80.000 cm)
Package 3 Length	23.62 in (60.000 cm)
Package 3 Weight	81.52 lb(US) (36.976 kg)

Offer Sustainability

California proposition 65	WARNING: This product can expose you to chemicals including: Lead and lead compounds, which is known to the State of California to cause cancer and birth defects or other reproductive harm. For more information go to www.P65Warnings.ca.gov
REACh Regulation	REACh Declaration
EU RoHS Directive	Pro-active compliance (Product out of EU RoHS legal scope)
Mercury free	Yes
China RoHS Regulation	China RoHS Declaration
RoHS exemption information	Yes
WEEE	The product must be disposed on European Union markets following specific waste collection and never end up in rubbish bins.
Upgradeability	Upgradeable through digital modules and upgraded components

TM171DWAL2U

Dimensions

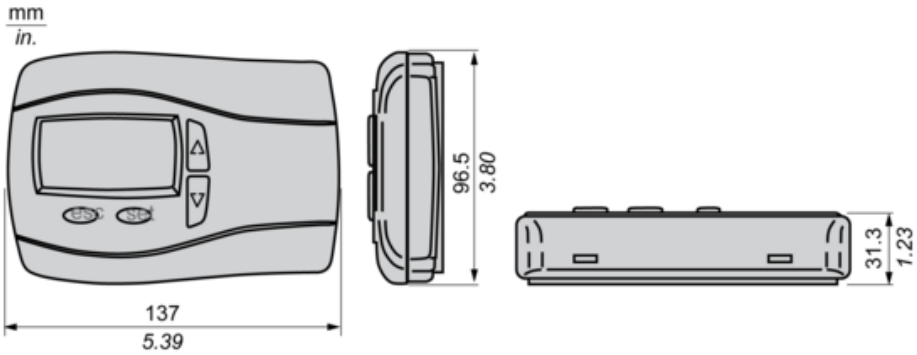

TM171DWAL2U

Mounting

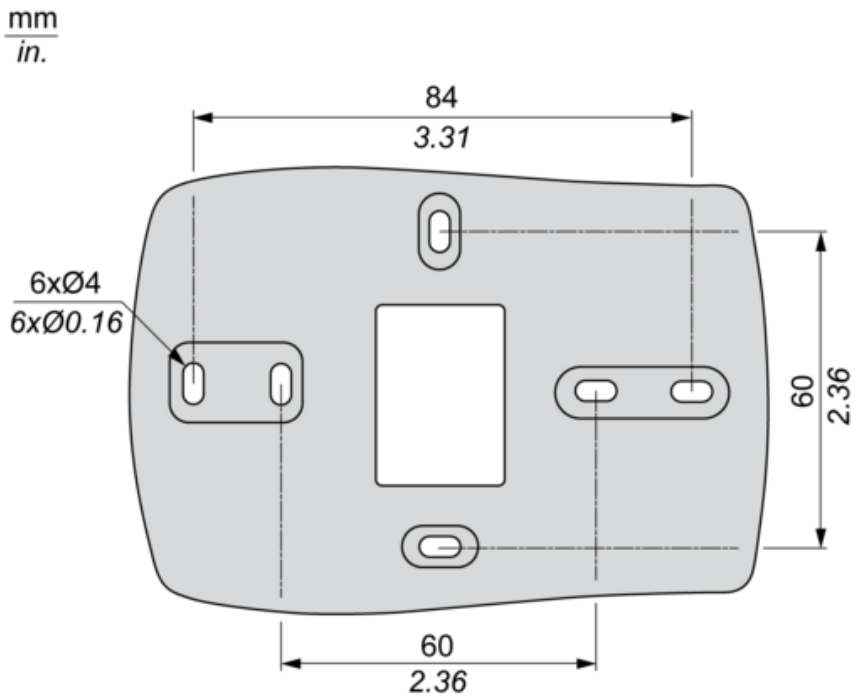

Wiring Diagram

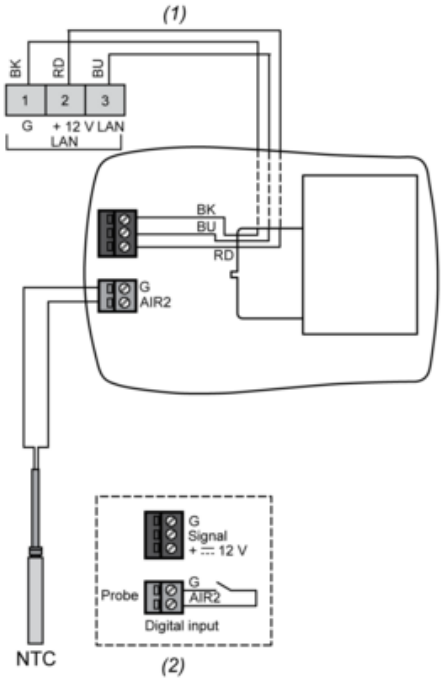

(1) LAN Expansion bus

(2) Remote probe not included

RD : Red

BU : Blue

BK : Black

Ex.Transducer

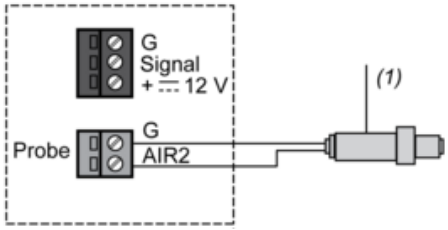

(1) Power supply