Technical Information Bulletin
Ballast

Date:		**Name of distributor:**	
In hands date of project:		**Client #:**	
Project name/Number:		**Name of end user:**	

ORDERING INFORMATION

Order Code: 70505
Description: E228T5PS120-277/N/BULK S2
UPC: 069549035201

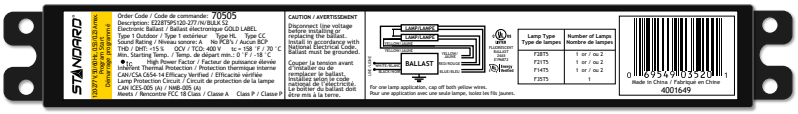

SPECIFICATIONS

Ballast Type:	Electronic	**Type:**	1 Outdoor
Starting Method:	Program Start	**Contains PCBs:**	No
Lamp Connection:	Series	**Sound Rating:**	A
Input Voltage (V):	120-277	**Open Current Voltage (OCV) (V):**	400
Input Frequency (Hz):	50/60	**Inherent Thermal Protection:**	Yes
Max. Case Temperature:	158 °F / 70 °C	**ICES-005 Compliant:**	Class A
Thermal Protection:	Class P	**Auto-restrike:**	Yes

c UL us LISTED FLUORESCENT BALLAST 24A5 E196872

c UL Energy Verified

CAN/CSA C654-14
Efficacy Verified

Lamp Type	Number of Lamps	Rated Lamp Watts	Min. Start Temp. (°F / °C)	Input Current (A)	Input Power (ANSI Watts)	Ballast Factor	Max THD (%)	Power Factor	Max. Lamp Current Crest Factor	B.E.F.
120 VOLTS										
F28T5	2	28	0/-18	0.53	64	1.00	10	0.98	1.70	1.59
F21T5	2	21	0/-18	0.39	49	1.10	10	0.98	1.70	2.25
F14T5	2	14	0/-18	0.28	34	1.11	10	0.98	1.70	3.37
F28T5	1	28	0/-18	0.29	33	1.12	10	0.98	1.70	3.34
F21T5	1	21	0/-18	0.22	25	1.08	10	0.98	1.70	4.41
F14T5	1	14	0/-18	0.14	18	1.16	10	0.98	1.70	6.65
F35T5	1	35	0/-18	0.34	41	1.10	10	0.98	1.70	2.68
277 VOLTS										
F28T5	2	28	0/-18	0.23	63	1.00	10	0.98	1.70	1.62
F21T5	2	21	0/-18	0.17	48	1.10	10	0.95	1.70	2.26
F14T5	2	14	0/-18	0.13	34	1.12	10	0.95	1.70	3.35
F28T5	1	28	0/-18	0.12	34	1.12	10	0.95	1.70	3.31
F21T5	1	21	0/-18	0.10	25	1.08	10	0.90	1.70	4.29
F14T5	1	14	0/-18	0.07	18	1.16	15	0.85	1.70	6.36
F35T5	1	35	0/-18	0.15	41	1.10	10	0.95	1.70	2.67

Data is based upon tests performed in a controlled environment and representative of relative performance.
Actual performance can vary depending on operating conditions. Specifications are subject to change without notice.

March 12, 2025

Technical Information Bulletin
Ballast

WIRING DIAGRAM

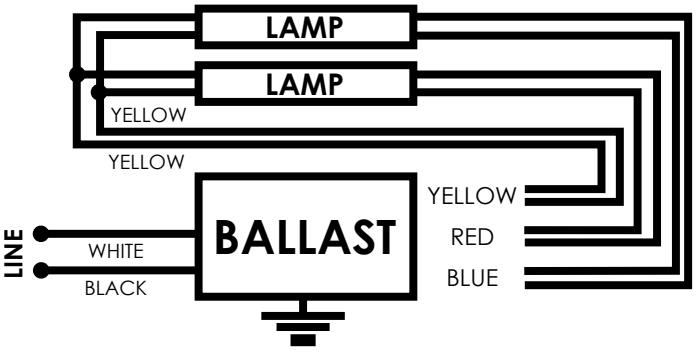

For one lamp application, cap off both yellow wires.

LEADS LENGTH

Black	25" (63.5 cm)
White	25" (63.5 cm)
Blue	31" (78.7 cm)
Red	31" (78.7 cm)
Yellow	46" (116.8 cm)

BALLAST DIMENSIONS

Length (L):	9.5" (24.1 cm)
Width (W):	1.3" (3.3 cm)
Height (H):	1.1" (2.8 cm)
Mounting (M):	8.9" (22.6 cm)

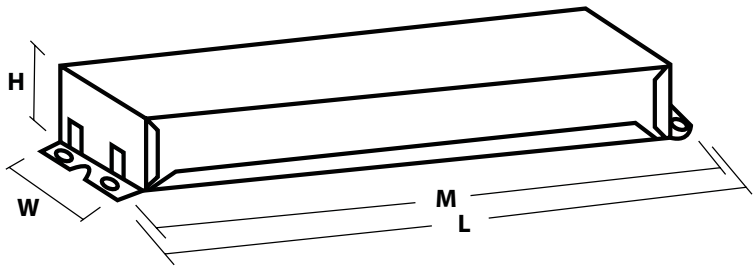

Qty	Description	Price

I accept the specifications of the ballast configuration mentioned above.

Name: _____

Company: _____

Signature: _____ Date: _____

Data is based upon tests performed in a controlled environment and representative of relative performance.
Actual performance can vary depending on operating conditions. Specifications are subject to change without notice.

March 12, 2025