Product data sheet
Characteristics

STBDDI3230K
standard digital input kit - Modicon STB - 24 V DC - 2 I

Main

Range of product	Modicon STB distributed I/O solution
Product or component type	Standard digital input kit
Kit composition	STBXTS2100, 6-terminal spring clamp connector STBXTS1100, 6-terminal screw type connector STBXBA1000 base STBDDI3230 module
Discrete input number	2
Discrete input voltage	24 V
Discrete input voltage type	DC

Complementary

Input voltage limits	11...30 V at state 1 -3...5 V at state 0
Permissible voltage	30 V
Absolute maximum voltage	56 V 1.3 ms
Discrete input current	7.5 mA
Current state 0 guaranteed	<= 2 mA
Current state 1 guaranteed	>= 6 mA
Discrete input logic	Positive or negative
Response time	0.61 ms off-to-on 0.2 ms 0.625 ms on-to-off 0.2 ms
Protection type	Power protection integrated fuse on PDM time lag 10 A Input protection resistor-limited Reverse polarity protection
Insulation between channels and logic bus	2000 V for 1 minute
Cold swapping	Yes
Hot swapping	Yes for standard NIMs
Input filtering	1 ms

Disclaimer: This documentation is not intended as a substitute for and is not to be used for determining suitability or reliability of these products for specific user applications

	2 ms 4 ms 8 ms 0.5 ms 16 ms +/- 0.1 ms 0.2 ms
Current supplied by sensor	100 mA per channel
Product compatibility	I/O base STBXBA1000 Power distribution module STBPDT3100/3105
[Us] rated supply voltage	24 V DC
Supply	Power distribution module
Current consumption	55 mA 5 V DC logic bus
Marking	CE
Overvoltage category	II
Status LED	1 LED (green)module status (RDY) Channel status (IN1 to IN2) 1 LED per channel green) 1 LED (red)module error (ERR)
Depth	2.56 in (65.1 mm)
Height	0.72 in (18.4 mm)
Width	4.92 in (125 mm)
Net weight	0.24 lb(US) (0.11 kg)

Environment

Standards	EN/IEC 61131-2 type 2
Product certifications	UL FM Class 1 Division 2 CSA
Pollution degree	2 conforming to IEC 60664-1
Operating altitude	<= 2000 m
IP degree of protection	IP20 conforming to EN 61131-2 class 1
Ambient air temperature for operation	-13…158 °F (-25…70 °C) without derating)
Ambient air temperature for operation	32...140 °F without derating
Ambient air temperature for storage	-40…85 °C without derating
Ambient air temperature for storage	-40...185 °F without derating
Relative humidity	95 % at 60 °C without condensation
Vibration resistance	3 gn at 58…150 Hz on 35 x 7.5 mm symmetrical DIN rail 5 gn at 58…150 Hz on 35 x 15 mm symmetrical DIN rail +/-0.35 mm at 10…58 Hz
Shock resistance	30 gn for 11 ms conforming to IEC 88 reference 2-27

Packing Units

Package 1 Weight	0.29 lb(US) (0.130 kg)
Package 1 Height	1.06 in (27.000 mm)
Package 1 width	3.15 in (80.000 mm)
Package 1 Length	5.12 in (130.000 mm)

Offer Sustainability

Sustainable offer status	Green Premium product
REACh Regulation	REACh Declaration
EU RoHS Directive	Pro-active compliance (Product out of EU RoHS legal scope) EU RoHS Declaration
Mercury free	Yes
RoHS exemption information	Yes
China RoHS Regulation	China RoHS declaration
Environmental Disclosure	Product Environmental Profile
Circularity Profile	End of Life Information

WEEE	The product must be disposed on European Union markets following specific waste collection and never end up in rubbish bins

Contractual warranty

Warranty	18 months

STBDDI3230K

Dimensions

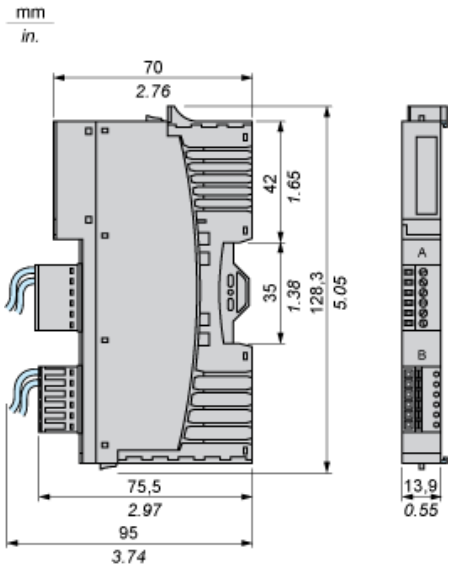

Wiring Diagram

Example

1 three-wire sensor and 1 two-wire sensor

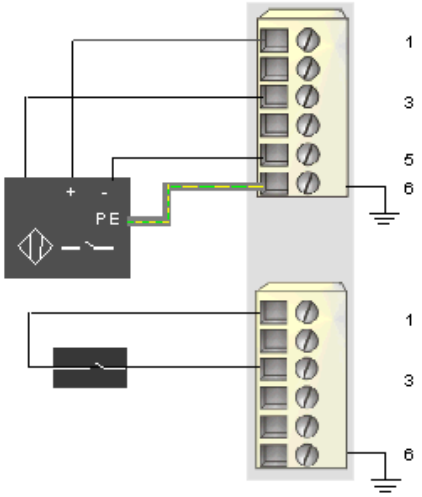

Pin	Top Connector	Bottom Connector
1	+24 VDC from sensor bus for field device accessories	+24 VDC from sensor bus for field device accessories
2	+24 VDC from sensor bus for field device accessories	+24 VDC from sensor bus for field device accessories
3	input from sensor 1	input from sensor 2
4	field power return (to the module)	field power return (to the module)
5	field power return (to the module)	field power return (to the module)
6	protective earth	protective earth