Product data sheet
Characteristics

ABE7CPA03
connection sub-base ABE7 - for distribution of 8 analog channels

Main

Range of Product	Modicon ABE7
Product or Component Type	Connection sub-base for counter and analogue channels
Number of Channels	8
Connections - terminals	Screw type terminals, 1 x 0.09...1 x 1.5 mm² AWG 28...AWG 16) flexible with cable end Screw type terminals, 1 x 0.14...1 x 2.5 mm² AWG 26...AWG 12) solid Screw type terminals, 1 x 0.14...1 x 2.5 mm² AWG 26...AWG 14) flexible without cable end Screw type terminals, 2 x 0.09...2 x 0.75 mm² AWG 28...AWG 20) flexible with cable end Screw type terminals, 2 x 0.2...2 x 2.5 mm² AWG 24...AWG 14) solid

Complementary

Function of module	Analogue input current Premium Analogue input voltage Premium Pt 100 Premium
[Uc] control circuit voltage	24 V DC
Connection to PLC	SUB-D 25
Fixing mode	By clips 35 mm symmetrical DIN rail) By screws solid plate with fixing kit)
[Ui] rated insulation voltage	2000 V terminals/mounting rails
Installation category	II IEC 60664-1
Tightening torque	5.31 lbf.in (0.6 N.m) flat Ø 3.5 mm
Net Weight	0.73 lb(US) (0.33 kg)

Environment

Standards	CSA C22.2 IEC 61131 UL 508
Product Certifications	DNV[RETURN]UL[RETURN]GL[RETURN]CSA
IP degree of protection	IP20 conforming to IEC 60529
Protective treatment	TC
Resistance to incandescent wire	1382 °F (750 °C) 30 s IEC 60695-2-11
Shock resistance	15 gn 11 ms IEC 60068-2-27
Vibration resistance	2 gn 10…150 Hz)IEC 60068-2-6
Resistance to electrostatic discharge	4 KV contact) level 3 IEC 61000-4-2 8 kV air) level 3 IEC 61000-4-2
Resistance to radiated fields	9.14 V/m (10 V/m) 26000000…1000000000 Hz)IEC 61000-4-3 level 3
Resistance to fast transients	2 kV level 3 IEC 61000-4-4
Ambient air temperature for operation	32…140 °F (0…60 °C) IEC 61131-2
Ambient air temperature for storage	-40…176 °F (-40…80 °C) IEC 61131-2
Pollution degree	2 IEC 60664-1

The information provided in this documentation contains general descriptions and/or technical characteristics of the performance of the products contained herein.
This documentation is not intended as a substitute for and is not to be used for determining suitability or reliability of these products for specific user applications.
It is the duty of any such user or integrator to perform the appropriate and complete risk analysis, evaluation and testing of the products with respect to the relevant specific application or use thereof.
Neither Schneider Electric Industries SAS nor any of its affiliates or subsidiaries shall be responsible or liable for misuse of the information contained herein.

Ordering and shipping details

Category	22375-INTERFACE MODULE(ABA,R,S)
Discount Schedule	CP2
GTIN	3389110705003
Returnability	Yes
Country of origin	LV

Packing Units

Unit Type of Package 1	PCE
Number of Units in Package 1	1
Package 1 Height	2.76 in (7.000 cm)
Package 1 Width	3.15 in (8.000 cm)
Package 1 Length	5.31 in (13.500 cm)
Package 1 Weight	10.97 oz (311.000 g)

Offer Sustainability

California proposition 65	WARNING: This product can expose you to chemicals including: Lead and lead compounds, which is known to the State of California to cause cancer and birth defects or other reproductive harm. For more information go to www.P65Warnings.ca.gov
REACh Regulation	REACh Declaration
EU RoHS Directive	Pro-active compliance (Product out of EU RoHS legal scope)
Mercury free	Yes
China RoHS Regulation	China RoHS Declaration
RoHS exemption information	Yes

Contractual warranty

Warranty	18 months

ABE7CPA03

Dimensions

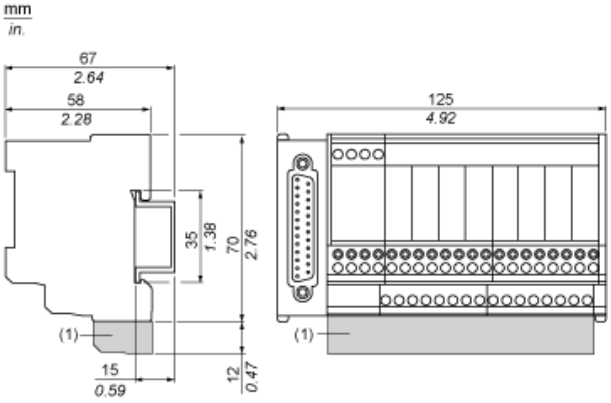

(1) ABE7BV20 / ABE7BV20E

ABE7CPA03

Mounting

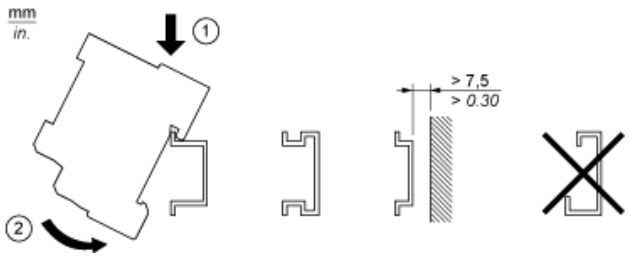

ABE7CPA03

Wiring Diagram

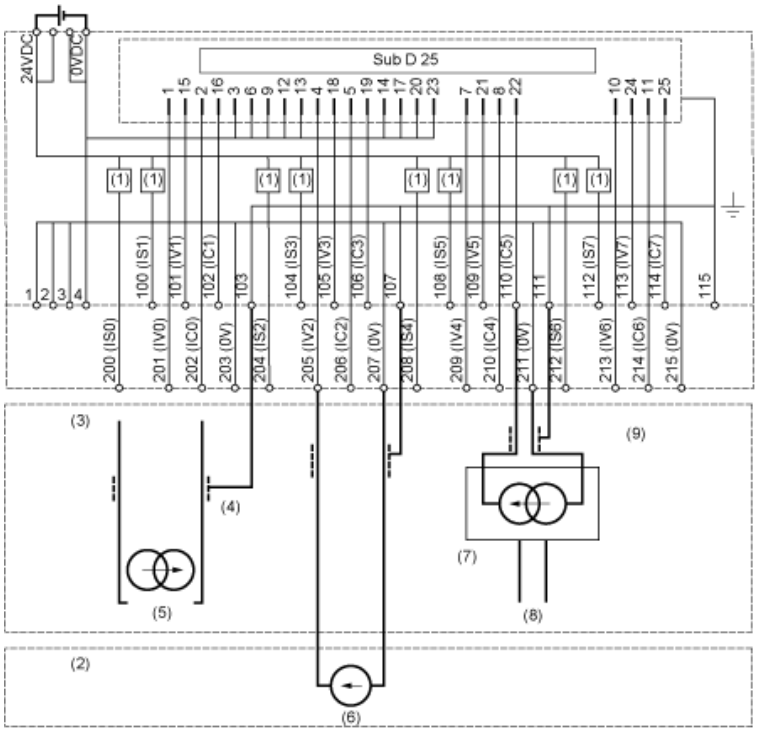

(1) Limiter 25 mA
(2) 8 input voltage
(3) 8 input current
(4) 2-wire sensor
(5) Channel via 0
(6) Channel via 2
(7) Power supply
(8) Channel via 5
(9) 4-wire sensor