Product data sheet
Characteristics

TM3DM8RG
discrete I/O module, Modicon TM3, 8 IO, 4 inputs, 4 relay outputs, spring, 24V DC

Main

Range of Product	Modicon TM3
Product or Component Type	Discrete I/O module
Range Compatibility	Modicon M241 Modicon M251 Modicon M221 Modicon M262
Discrete input number	4 input IEC 61131-2 Type 1
Discrete input voltage	24 V
Discrete input current	7 mA input
Discrete output type	Relay normally open
Discrete output number	4
Discrete output logic	Positive or negative
Discrete output voltage	24 V DC relay output 240 V AC relay output
Discrete output current	2000 mA relay output

Complementary

Discrete I/O number	8
Current consumption	5 mA 5 V DC via bus connector at state off) 0 mA 24 V DC via bus connector at state on) 0 mA 24 V DC via bus connector at state off) 25 mA 5 V DC via bus connector at state on)
Discrete input voltage type	DC
Voltage state 1 guaranteed	15...28.8 V input
Current state 1 guaranteed	>= 2.5 mA input)
Voltage state 0 guaranteed	0...5 V input
Current state 0 guaranteed	<= 1 mA input)
Input impedance	3.4 kOhm
Response time	4 ms (turn-on) 4 ms (turn-off)
Maximum current per output common	7 A
Mechanical durability	20000000 cycles
Minimum load	10 mA 5 V DC relay output
Local signalling	For I/O state 1 LED per channel (green)
Electrical connection	11 x 2.5 mm² removable spring terminal block pitch 5.08 mm for inputs and outputs
Maximum cable distance between devices	Unshielded cable <98.43 ft (30 m) regular input
Insulation	Between input and internal logic 500 V AC Non-insulated between inputs Between input groups and output groups 1500 V AC Between open contact 750 V AC Between output and internal logic 500 V AC Non-insulated between outputs
Marking	CE
Mounting support	Top hat type TH35-15 rail IEC 60715 Top hat type TH35-7.5 rail IEC 60715 Plate or panel with fixing kit
Height	3.54 in (90 mm)
Depth	3.33 in (84.6 mm)
Width	1.08 in (27.4 mm)
Net Weight	2.09 lb(US) (0.95 kg)

The information provided in this documentation contains general descriptions and/or technical characteristics of the performance of the products contained herein.
This documentation is not intended as a substitute for and is not to be used for determining suitability or reliability of these products for specific user applications.
It is the duty of any such user or integrator to perform the appropriate and complete risk analysis, evaluation and testing of the products with respect to the relevant specific application or use thereof.
Neither Schneider Electric Industries SAS nor any of its affiliates or subsidiaries shall be responsible or liable for misuse of the information contained herein.

Environment

Standards	IEC 61131-2
Product Certifications	cULus[RETURN]CE[RETURN]UKCA[RETURN]RCM[RETURN]EAC[RETURN]cULus HazLoc
Resistance to electrostatic discharge	8 KV in air IEC 61000-4-2 4 kV on contact IEC 61000-4-2
Resistance to electromagnetic fields	9.14 V/M (10 V/m) 80 MHz...1 GHz IEC 61000-4-3 2.74 V/M (3 V/m) 1.4 GHz...2 GHz IEC 61000-4-3 0.91 V/m (1 V/m) 2 GHz...3 GHz IEC 61000-4-3
Resistance to magnetic fields	98.43 A/m (30 A/m) 50/60 Hz IEC 61000-4-8
Resistance to fast transients	1 KV I/OIEC 61000-4-4 2 kV relay outputIEC 61000-4-4
Surge withstand	2 KV output common mode IEC 61000-4-5 1 kV input common mode IEC 61000-4-5
Resistance to conducted disturbances	10 V 0.15...80 MHz IEC 61000-4-6 3 V spot frequency (2, 3, 4, 6.2, 8.2, 12.6, 16.5, 18.8, 22, 25 MHz) Marine specification (LR, ABS, DNV, GL)
Electromagnetic emission	Radiated emissions 40 dBµV/m QP class A 10 m)30…230 MHz IEC 55011 Radiated emissions 47 dBµV/m QP class A 10 m)230…1000 MHz IEC 55011
Ambient Air Temperature for Operation	14…95 °F (-10…35 °C) vertical installation 14…131 °F (-10…55 °C) horizontal installation
Ambient Air Temperature for Storage	-13…158 °F (-25…70 °C)
Relative humidity	10…95 %, without condensation in operation) 10…95 %, without condensation in storage)
IP degree of protection	IP20 with protective cover in place
Pollution degree	2
Operating altitude	0...6561.68 ft (0...2000 m)
Storage altitude	0.00…9842.52 ft (0…3000 m)
Vibration resistance	3.5 mm 5…8.4 Hz DIN rail 3 gn 8.4…150 Hz DIN rail 3.5 mm 5…8.4 Hz panel 3 gn 8.4…150 Hz panel
Shock resistance	15 gn 11 ms

Ordering and shipping details

Category	22533-M2XX PLC & ACCESSORIES
Discount Schedule	MSX
GTIN	3606480611537
Returnability	Yes
Country of origin	TW

Packing Units

Unit Type of Package 1	PCE
Number of Units in Package 1	1
Package 1 Height	2.95 in (7.5 cm)
Package 1 Width	4.92 in (12.5 cm)
Package 1 Length	4.13 in (10.5 cm)
Package 1 Weight	8.11 oz (230.0 g)
Unit Type of Package 2	S02
Number of Units in Package 2	9
Package 2 Height	5.91 in (15 cm)
Package 2 Width	11.81 in (30 cm)
Package 2 Length	15.75 in (40 cm)
Package 2 Weight	4.95 lb(US) (2.244 kg)
Unit Type of Package 3	P12
Number of Units in Package 3	288
Package 3 Height	29.53 in (75 cm)
Package 3 Width	47.24 in (120 cm)

Package 3 Length	31.50 in (80 cm)
Package 3 Weight	163.14 lb(US) (74 kg)

Offer Sustainability

Sustainable offer status	Green Premium product
California proposition 65	WARNING: This product can expose you to chemicals including: Lead and lead compounds, which is known to the State of California to cause cancer and birth defects or other reproductive harm. For more information go to www.P65Warnings.ca.gov
REACh Regulation	REACh Declaration
REACh free of SVHC	Yes
EU RoHS Directive	Pro-active compliance (Product out of EU RoHS legal scope) EU RoHS Declaration
Toxic heavy metal free	Yes
Mercury free	Yes
China RoHS Regulation	China RoHS Declaration
RoHS exemption information	Yes
Environmental Disclosure	Product Environmental Profile
Circularity Profile	End Of Life Information
WEEE	The product must be disposed on European Union markets following specific waste collection and never end up in rubbish bins.
PVC free	Yes

TM3DM8RG

Dimensions

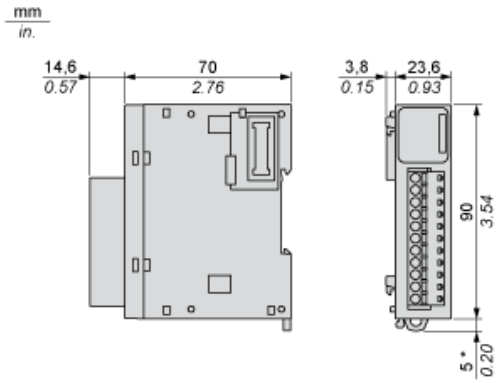

(*) 8.5 mm/0.33 in. when the clamp is pulled out.

Spacing Requirements

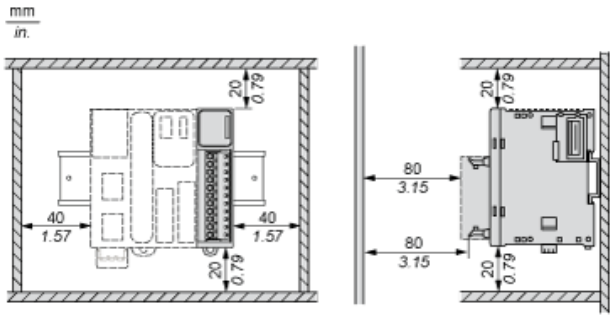

Mounting on a Rail

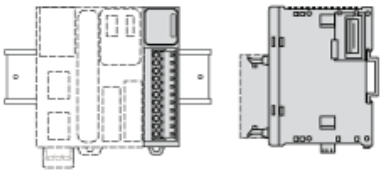

Incorrect Mounting

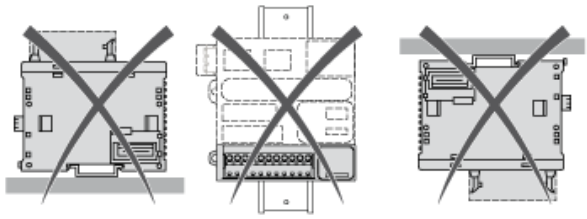

Mounting on a Panel Surface

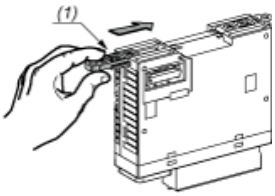

(1) Install a mounting strip

Mounting Hole Layout

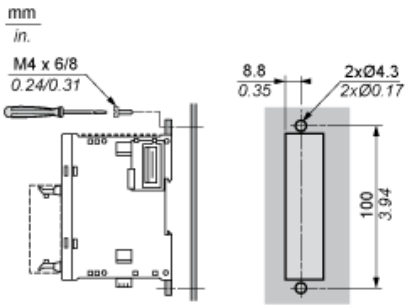

Digital Mixed I/O Module (8-channel)

Wiring Diagram (Sink / Source)

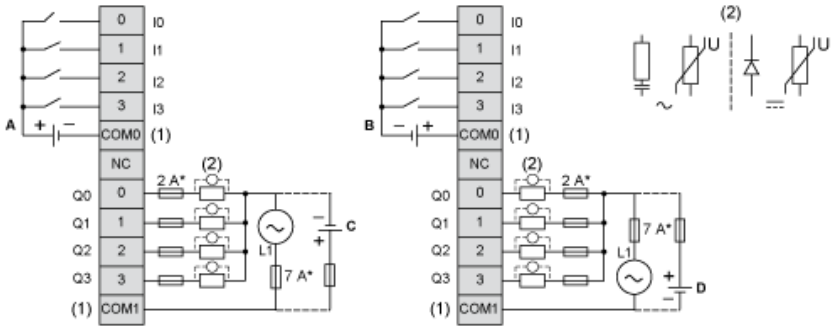

(*) Type T fuse
(1) The COM0 and COM1 terminals are not connected internally.
(2) To improve the life time of the contacts, and to protect from potential inductive load damage, it is recommended to connect a free wheeling diode in parallel to each inductive DC load or an RC snubber in parallel of each inductive AC load.
(A) Sink wiring (positive logic)
(B) Source wiring (negative logic)
(C) Source wiring (positive logic)
(D) Sink wiring (negative logic)