Product data sheet
Characteristics

LC2D65AE7
TeSys Deca reversing contactor - 3P(3 NO) - AC-3 - <= 440 V 65 A - 48 V AC coil

The information provided in this documentation contains general descriptions and/or technical characteristics of the performance of the products contained herein.
This documentation is not intended as a substitute for and is not to be used for determining suitability or reliability of these products for specific user applications.
It is the duty of any such user or integrator to perform the appropriate and complete risk analysis, evaluation and testing of the products with respect to the relevant specific application or use thereof.
Neither Schneider Electric Industries SAS nor any of its affiliates or subsidiaries shall be responsible or liable for misuse of the information contained herein.

Main

Range	TeSys TeSys Deca
Product name	TeSys D TeSys Deca
Product or Component Type	Reversing contactor
Device short name	LC2D
Contactor application	Resistive load Motor control
Utilisation category	AC-1 AC-3 AC-3e
Device presentation	Preassembled with reversing power busbar
Poles description	3P
Power pole contact composition	3 NO
[Ue] rated operational voltage	Power circuit <= 690 V AC 25...400 Hz Power circuit <= 300 V DC
[Ie] rated operational current	80 A (at <140 °F (60 °C)) at <= 440 V AC AC-1 for power circuit 65 A (at <140 °F (60 °C)) at <= 440 V AC AC-3 for power circuit 65 A (at <140 °F (60 °C)) at <= 440 V AC AC-3e for power circuit
Motor power kW	18.5 KW at 220...230 V AC 50 Hz 30 KW at 380...400 V AC 50 Hz 37 KW at 415...440 V AC 50 Hz 37 KW at 500 V AC 50 Hz 37 kW at 660...690 V AC 50 Hz
Motor power HP (UL / CSA)	40 Hp at 460/480 V AC 60 Hz for 3 phase motors 5 Hp at 115 V AC 60 Hz for 1 phase motors 10 Hp at 230/240 V AC 60 Hz for 1 phase motors 20 Hp at 200/208 V AC 60 Hz for 3 phase motors 20 Hp at 230/240 V AC 60 Hz for 3 phase motors 50 hp at 575/600 V AC 60 Hz for 3 phase motors
Control circuit type	AC 50/60 Hz
[Uc] control circuit voltage	48 V AC 50/60 Hz
Auxiliary contact composition	1 NO + 1 NC
[Uimp] rated impulse withstand voltage	6 kV IEC 60947
Overvoltage category	III
[Ith] conventional free air thermal current	10 A (at 140 °F (60 °C)) for signalling circuit 80 A (at 140 °F (60 °C)) for power circuit
Irms rated making capacity	140 A AC for signalling circuit conforming to IEC 60947-5-1 250 A DC for signalling circuit conforming to IEC 60947-5-1 1000 A at 440 V for power circuit conforming to IEC 60947
Rated breaking capacity	1000 A at 440 V for power circuit conforming to IEC 60947
[Icw] rated short-time withstand current	520 A 104 °F (40 °C) - 10 s for power circuit 900 A 104 °F (40 °C) - 1 s for power circuit 110 A 104 °F (40 °C) - 10 min for power circuit 260 A 104 °F (40 °C) - 1 min for power circuit 100 A - 1 s for signalling circuit 120 A - 500 ms for signalling circuit 140 A - 100 ms for signalling circuit
Associated fuse rating	10 A gG for signalling circuit conforming to IEC 60947-5-1 125 A gG at <= 690 V coordination type 1 for power circuit 125 A gG at <= 690 V coordination type 2 for power circuit

Average impedance	1.5 mOhm - Ith 80 A 50 Hz for power circuit
[Ui] rated insulation voltage	Power circuit 690 V IEC 60947-4-1 Power circuit 600 V CSA Power circuit 600 V UL Signalling circuit 690 V IEC 60947-1 Signalling circuit 600 V CSA Signalling circuit 600 V UL
Electrical durability	1.45 Mcycles 65 A AC-3 <= 440 V 1.4 Mcycles 80 A AC-1 <= 440 V 1.45 Mcycles 65 A AC-3e <= 440 V
Power dissipation per pole	9.6 W AC-1 6.3 W AC-3 6.3 W AC-3e
Front cover	With
Interlocking type	Mechanical
Mounting Support	Plate Rail
Standards	CSA C22.2 No 14 EN 60947-4-1 EN 60947-5-1 IEC 60947-4-1 IEC 60947-5-1 UL 508 IEC 60335-1
Product Certifications	UL[RETURN]CSA[RETURN]RINA[RETURN]GOST[RETURN]CCC (Lloyds register of shipping) [RETURN]GL[RETURN]BV[RETURN]UKCA
Connections - terminals	Control circuit screw clamp terminals 1 0.00…0.01 in² (1…4 mm²)flexible without cable end Control circuit screw clamp terminals 2 0.00…0.01 in² (1…4 mm²)flexible without cable end Control circuit screw clamp terminals 1 0.00…0.01 in² (1…4 mm²)flexible with cable end Control circuit screw clamp terminals 2 0.00…0.00 in² (1…2.5 mm²)flexible with cable end Control circuit screw clamp terminals 1 0.00…0.01 in² (1…4 mm²)solid Control circuit screw clamp terminals 2 0.00…0.01 in² (1…4 mm²)solid Power circuit EverLink BTR screw connectors 1 0.00…0.05 in² (1…35 mm²)flexible without cable end Power circuit EverLink BTR screw connectors 2 0.00…0.04 in² (1…25 mm²)flexible without cable end Power circuit EverLink BTR screw connectors 1 0.00…0.05 in² (1…35 mm²)flexible with cable end Power circuit EverLink BTR screw connectors 2 0.00…0.04 in² (1…25 mm²)flexible with cable end Power circuit EverLink BTR screw connectors 1 0.00…0.05 in² (1…35 mm²)solid Power circuit EverLink BTR screw connectors 2 0.00…0.04 in² (1…25 mm²)solid
Tightening torque	Control circuit 15.05 lbf.in (1.7 N.m) screw clamp terminals flat Ø 6 mm Control circuit 15.05 lbf.in (1.7 N.m) screw clamp terminals Philips No 2 Power circuit 70.81 lbf.in (8 N.m) EverLink BTR screw connectors 0.04…0.05 in² (25…35 mm²) hexagonal 0.16 in (4 mm) Power circuit 44.25 lbf.in (5 N.m) EverLink BTR screw connectors 0.00…0.04 in² (1…25 mm²) hexagonal 0.16 in (4 mm) Control circuit 15.05 lbf.in (1.7 N.m) screw clamp terminals pozidriv No 2 Power circuit 22.13 lbf.in (2.5 N.m) screw clamp terminals pozidriv No 2
Operating time	4...19 ms opening 12...26 ms closing
Safety reliability level	B10d = 1369863 cycles contactor with nominal load EN/ISO 13849-1 B10d = 20000000 cycles contactor with mechanical load EN/ISO 13849-1
Mechanical durability	6 Mcycles
Maximum operating rate	3600 cyc/h 140 °F (60 °C)

Complementary

Coil technology	Without built-in suppressor module
Control circuit voltage limits	0.3...0.6 Uc -40…158 °F (-40…70 °C) drop-out AC 50/60 Hz 0.8...1.1 Uc -40…140 °F (-40…60 °C) operational AC 50 Hz 0.85...1.1 Uc -40…140 °F (-40…60 °C) operational AC 60 Hz 1...1.1 Uc 140…158 °F (60…70 °C) operational AC 50/60 Hz
Inrush power in VA	140 VA 60 Hz cos phi 0.75 (at 68 °F (20 °C)) 160 VA 50 Hz cos phi 0.75 (at 68 °F (20 °C))
Hold-in power consumption in VA	13 VA 60 Hz cos phi 0.3 (at 68 °F (20 °C)) 15 VA 50 Hz cos phi 0.3 (at 68 °F (20 °C))
Heat dissipation	4…5 W 50/60 Hz
Auxiliary contacts type	Mechanically linked 1 NO + 1 NC IEC 60947-5-1 Mirror contact 1 NC IEC 60947-4-1
Signalling circuit frequency	25...400 Hz
Minimum switching current	5 mA for signalling circuit
Minimum switching voltage	17 V for signalling circuit
Non-overlap time	1.5 Ms on de-energisation between NC and NO contact 1.5 ms on energisation between NC and NO contact
Insulation resistance	> 10 MOhm for signalling circuit

Environment

IP degree of protection	IP20 front face IEC 60529
Climatic withstand	IACS E10 IEC 60947-1 Annex Q category D
Protective treatment	TH IEC 60068-2-30
Pollution degree	3
Ambient air temperature for operation	-40…140 °F (-40…60 °C) 140…158 °F (60…70 °C) with derating
Ambient Air Temperature for Storage	-76…176 °F (-60…80 °C)
Operating altitude	0...9842.52 ft (0...3000 m)
Fire resistance	1562 °F (850 °C) IEC 60695-2-1
Flame retardance	V1 conforming to UL 94
Mechanical robustness	Vibrations contactor open2 Gn, 5...300 Hz Vibrations contactor closed4 Gn, 5...300 Hz Shocks contactor open10 Gn for 11 ms Shocks contactor closed15 Gn for 11 ms
Height	4.80 in (122 mm)
Width	4.69 in (119 mm)
Depth	4.72 in (120 mm)
Net Weight	4.17 lb(US) (1.89 kg)

Ordering and shipping details

Category	22357-CTR,TESYS D,OPEN,40-65A AC
Discount Schedule	I12
GTIN	3389119409629
Returnability	No
Country of origin	FR

Packing Units

Unit Type of Package 1	PCE
Number of Units in Package 1	1
Package 1 Height	5.51 in (14.000 cm)
Package 1 Width	6.50 in (16.500 cm)
Package 1 Length	7.68 in (19.500 cm)
Package 1 Weight	4.59 lb(US) (2.084 kg)
Unit Type of Package 2	S03
Number of Units in Package 2	4

Package 2 Height	11.81 in (30.000 cm)
Package 2 Width	11.81 in (30.000 cm)
Package 2 Length	15.75 in (40.000 cm)
Package 2 Weight	19.39 lb(US) (8.795 kg)

Offer Sustainability

Sustainable offer status	Green Premium product
California proposition 65	WARNING: This product can expose you to chemicals including: Antimony oxide & Antimony trioxide, which is known to the State of California to cause cancer. For more information go to www.P65Warnings.ca.gov
REACh Regulation	REACh Declaration
REACh free of SVHC	Yes
EU RoHS Directive	Compliant EU RoHS Declaration
Toxic heavy metal free	Yes
Mercury free	Yes
China RoHS Regulation	China RoHS Declaration
RoHS exemption information	Yes
Environmental Disclosure	Product Environmental Profile
Circularity Profile	End Of Life Information
WEEE	The product must be disposed on European Union markets following specific waste collection and never end up in rubbish bins.
PVC free	Yes

Contractual warranty

Warranty	18 months

LC2D65AE7

Dimensions

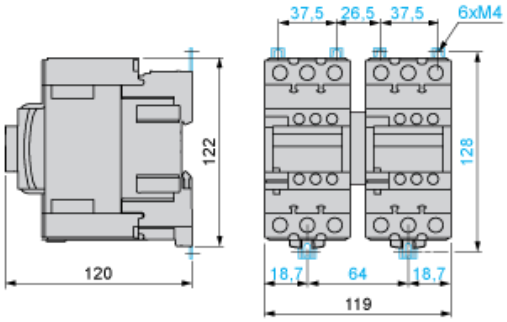

LC2D65AE7
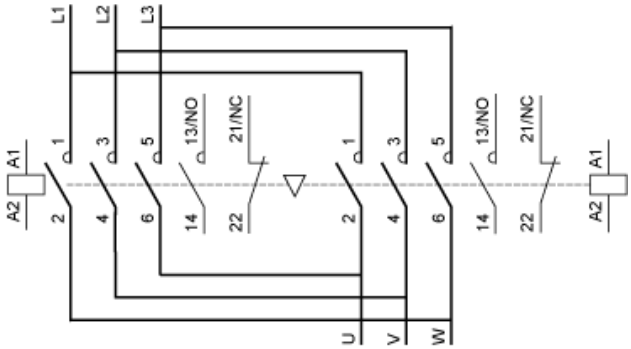
Wiring