BI8-G18-ADZ30X2-B3331

Inductive Sensor
With Increased Switching Distance

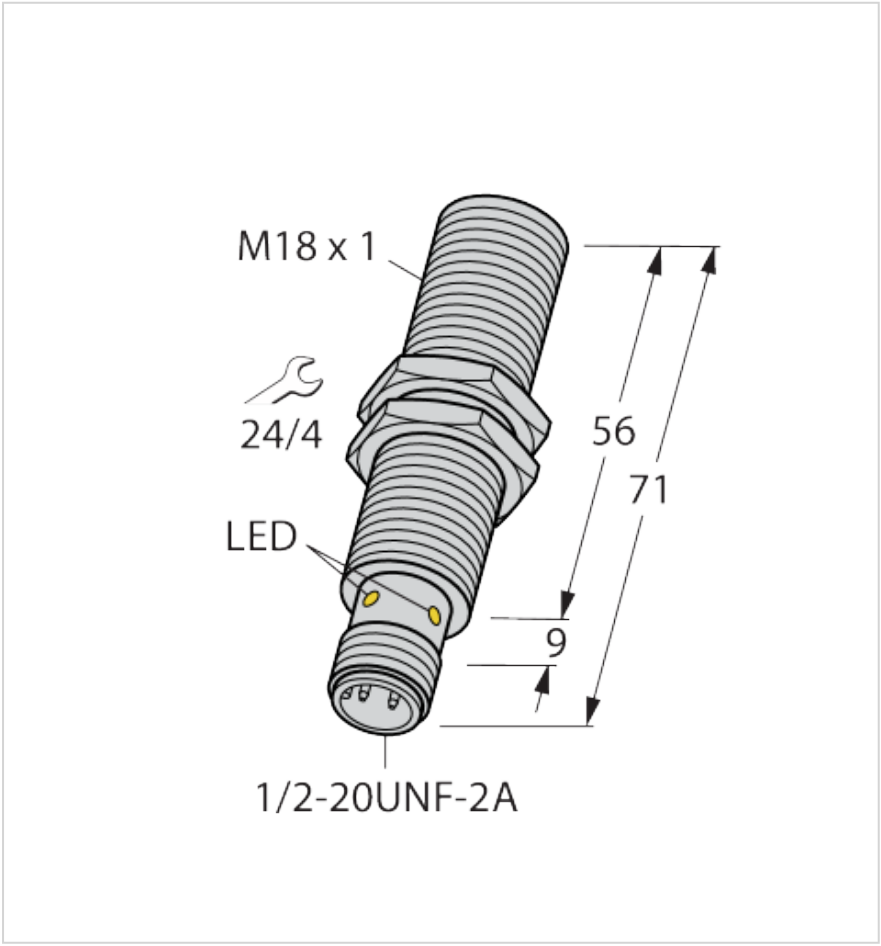

Type designation	BI8-G18-ADZ30X2-B3331
Ident-No.	4209301

Technical data

General data	
Correction factors	St37 = 1; Al = 0.3; stainless steel = 0.7; Ms = 0.4
Special features	Sn +
Utilization category AC	140
Detection area/measuring range	
Rated switching distance	8 mm
Secured operating distance	≤ (0.81 × Sn) mm

Features

- Threaded barrel, M18 x 1
- Chrome-plated brass
- Large sensing range
- AC 2-wire, 20…250 VAC
- DC 2-wire, 10…300 VDC
- NO contact
- 1/2" male connector

| 13-07-2026 17:07 | Subject to technical changes |

Technical data

Power supply	
Operating voltage U_B	20...250 VAC
Operating voltage U_B	10...300 VDC
Frequency	50...60 Hz
Voltage drop at I_e	≤ 6 V
Electrical data	
AC rated operational current	≤ 400 mA
Output function	2-wire, NO contact, 2-wire
Short-circuit protection	yes/Latching
Wire break/reverse polarity protection	yes/Complete
DC rated operational current	≤ 300 mA
Isolation test voltage	≤ 1,5 kV
Residual current	≤ 1,7 mA
Smallest operating current	≥ 3 mA
Surge current	≤ 3 A (≤ 20 ms max. 5 Hz)
Switching frequency	0,02 kHz
Accuracy/deviation	
Hysteresis	3 % v. E...15 % v. E.
Temperature drift	10 %
Repeat accuracy	≤ 2 % v. E.
Mechanical data	
Design	Threaded barrel, M18 x 1
Construction type designation	G18
	⌀ 18 mm
Housing material	Metal, CuZn, Chrome-plated
Active area material	Plastic, PA12-GF30
Max. tightening torque of housing nut	25 Nm
Electrical connection	Connector, 1/2″
Number of pins	3
Pressure resistant	no
Thread length	56 mm
Thread size	M18 × 1
Mounting conditions	Flush
Ambient conditions	
Ambient temperature	-25...+70 °C
Pollution degree	3
Shock resistance	30 g (11 ms)

Wiring Diagram

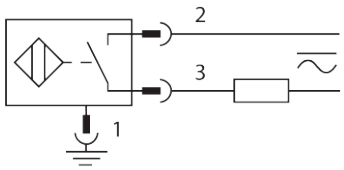

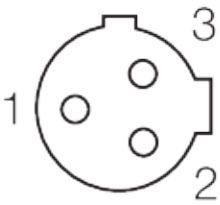

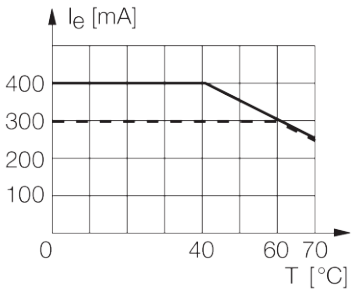

Functional principle

Inductive sensors detect metal objects contactless and wear-free. For this, they use a high-frequency electromagnetic AC field that interacts with the target. Inductive sensors generate this field via an RLC circuit with a ferrite coil.

| 13-07-2026 17:07 | Subject to technical changes |

Technical data

Vibration resistance	55 Hz (1 mm)
Protection class	IP67
Tests/approvals	
MTTF	2283 Years acc. to SN 29500 (Ed. 99) 40 °C
Displays/controls	
Power-on indication	LED, Green
Switching state	LED, Red

Assembly instructions

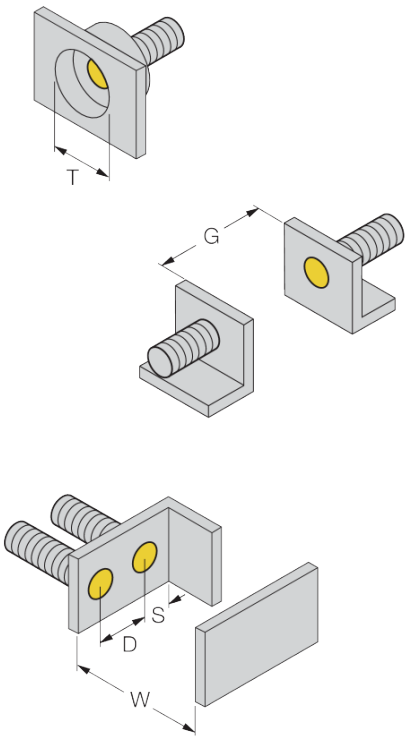

Distance D: 2 x B
Distance W: 3 x Sn
Distance T: 3 x B
Distance S: 1.5 x B
Distance G: 6 x Sn
Diameter active area B: 18 mm

| 13-07-2026 17:07 | Subject to technical changes |

Mounting accessories

MW18	6945004
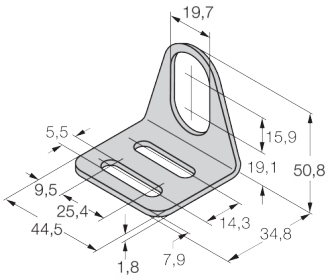	Mounting bracket for threaded barrel sensors; material: Stainless steel A2 1.4301 (AISI 304)

BSS-18	6901320
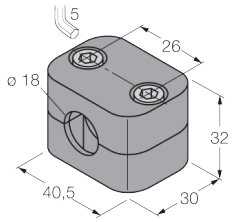	Mounting bracket for smooth and threaded barrel sensors; material: Polypropylene

QM-18	6945102
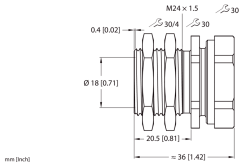	Quick-mount bracket with dead-stop; material: chrome-plated brass. Male thread M24 × 1.5. Note: The switching distance of the proximity switches may change when using quick-mount brackets.

| 13-07-2026 17:07 | Subject to technical changes |