Product data sheet
Characteristics

170ADO74050
discrete output module Modicon Momentum - 16 O solid state

Main

Range of Product	Modicon Momentum automation platform
Product or Component Type	Discrete output base AC
Group of channels	2 groups of 8 outputs
Discrete output number	16
Discrete output type	Triac
Discrete output voltage	230 V AC
Current per channel	0.5 A
Short-circuit protection	Internal fuse, 5 A slow-blow per group
Protective treatment	TC

Complementary

[Ue] rated operational voltage	230 V AC
Discrete output current	4 A per group 8 A per module
Minimum output current	30 mA
Maximum leakage current	2.4 mA 230 V AC
Surge current	10 A for 2 cycles 15 A for 1 cycle 5 A for 3 cycles
Maximum voltage drop	<1.5 V 0.5 A at state 1
Output overload protection	Internal fuse
Response time	1/2 x 1/f (= 0.5 of one line cycle) from state 0 to state 1 1/2 x 1/f (= 0.5 of one line cycle) from state 1 to state 0
Isolation between channels and bus	1780 V AC for 1 minute
Power dissipation	6 W typical 7.5 W maximum
Marking	CE
Local signalling	For channel status 16 LEDs
Current consumption	65 mA 230 V AC
Terminals description PLC n°1	(7)OUT_DIS#7 (10)OUT_DIS#10 (6)OUT_DIS#6 (1)OUT_DIS#1 (8)OUT_DIS#8 (2)OUT_DIS#2 (5)OUT_DIS#5 (9)OUT_DIS#9 (1N)PW (1L+)PW (11)OUT_DIS#11 (13)OUT_DIS#13 (4)OUT_DIS#4 TB (12)OUT_DIS#12 (16)OUT_DIS#16 (14)OUT_DIS#14 (15)OUT_DIS#15 (3)OUT_DIS#3
Depth	1.87 in (47.5 mm)
Height	5.57 in (141.5 mm)
Width	4.92 in (125 mm)
Net Weight	0.63 lb(US) (0.284 kg)

The information provided in this documentation contains general descriptions and/or technical characteristics of the performance of the products contained herein.
This documentation is not intended as a substitute for and is not to be used for determining suitability or reliability of these products for specific user applications.
It is the duty of any such user or integrator to perform the appropriate and complete risk analysis, evaluation and testing of the products with respect to the relevant specific application or use thereof.
Neither Schneider Electric Industries SAS nor any of its affiliates or subsidiaries shall be responsible or liable for misuse of the information contained herein.

Environment

Product Certifications	UL[RETURN]CSA[RETURN]FM Class 1 Division 2
Resistance to electrostatic discharge	4 KV contact IEC 801-2 8 kV on air IEC 801-2
Resistance to electromagnetic fields	9.14 V/m (10 V/m) 80...1000 MHz IEC 801-3
Ambient Air Temperature for Operation	32…140 °F (0…60 °C)
Ambient Air Temperature for Storage	-40…185 °F (-40…85 °C)
Relative Humidity	95 % without condensation
Operating altitude	<= 16404.2 ft (5000 m)

Ordering and shipping details

Category	18206-MOMENTUM PROCESSORS,I/O BASES,CONN.
Discount Schedule	PC31
GTIN	3595861147584
Returnability	No
Country of origin	ID

Packing Units

Unit Type of Package 1	PCE
Number of Units in Package 1	1
Package 1 Height	3.74 in (9.5 cm)
Package 1 Width	7.09 in (18.0 cm)
Package 1 Length	10.24 in (26.0 cm)
Package 1 Weight	17.00 oz (482.0 g)
Unit Type of Package 2	S03
Number of Units in Package 2	6
Package 2 Height	11.81 in (30.0 cm)
Package 2 Width	11.81 in (30.0 cm)
Package 2 Length	15.75 in (40.0 cm)
Package 2 Weight	6.38 lb(US) (2.892 kg)

Offer Sustainability

Sustainable offer status	Green Premium product
California proposition 65	WARNING: This product can expose you to chemicals including: Lead and lead compounds, which is known to the State of California to cause cancer and birth defects or other reproductive harm. For more information go to www.P65Warnings.ca.gov
REACh Regulation	REACh Declaration
EU RoHS Directive	Pro-active compliance (Product out of EU RoHS legal scope)
Mercury free	Yes
China RoHS Regulation	China RoHS Declaration
RoHS exemption information	Yes
Environmental Disclosure	Product Environmental Profile
Circularity Profile	End Of Life Information
WEEE	The product must be disposed on European Union markets following specific waste collection and never end up in rubbish bins.

Contractual warranty

Warranty	18 months

170ADO74050

Standard Adapter on a Discrete VAC Base

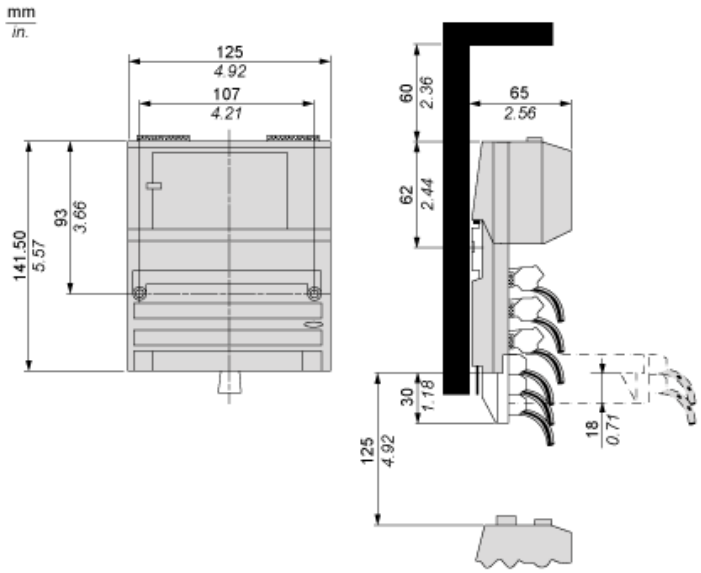

Mounting on a Wall

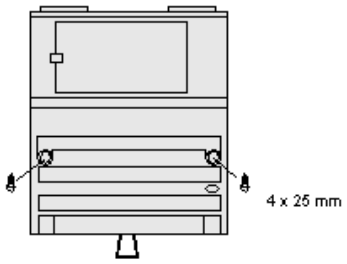

External Wiring Diagrams

2-Wire Device

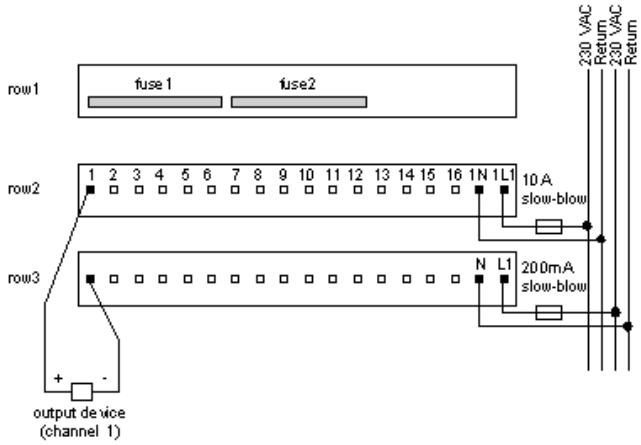

3-Wire Device

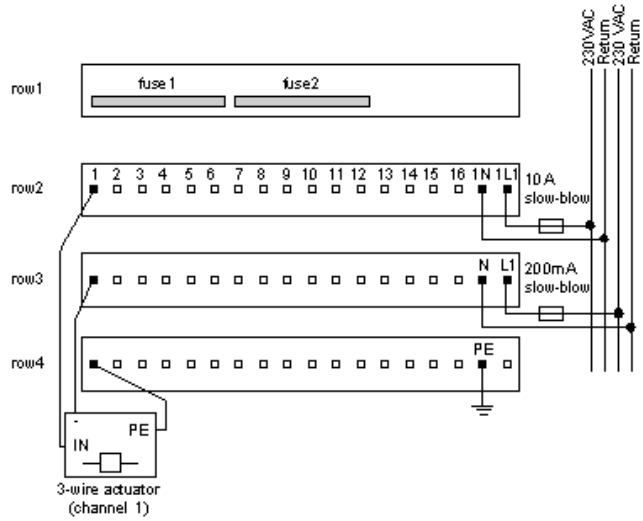

Internal Pin Connections
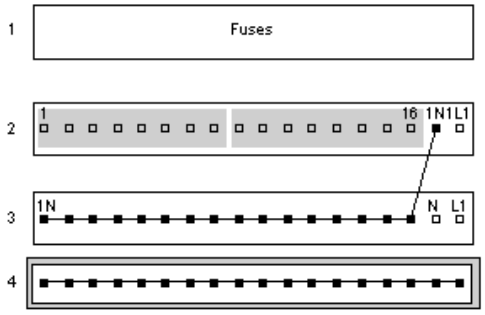
Rows 1 through 3 show the internal connections between terminals on the I/O base. Row 4 shows the internal connections on the optional busbar.