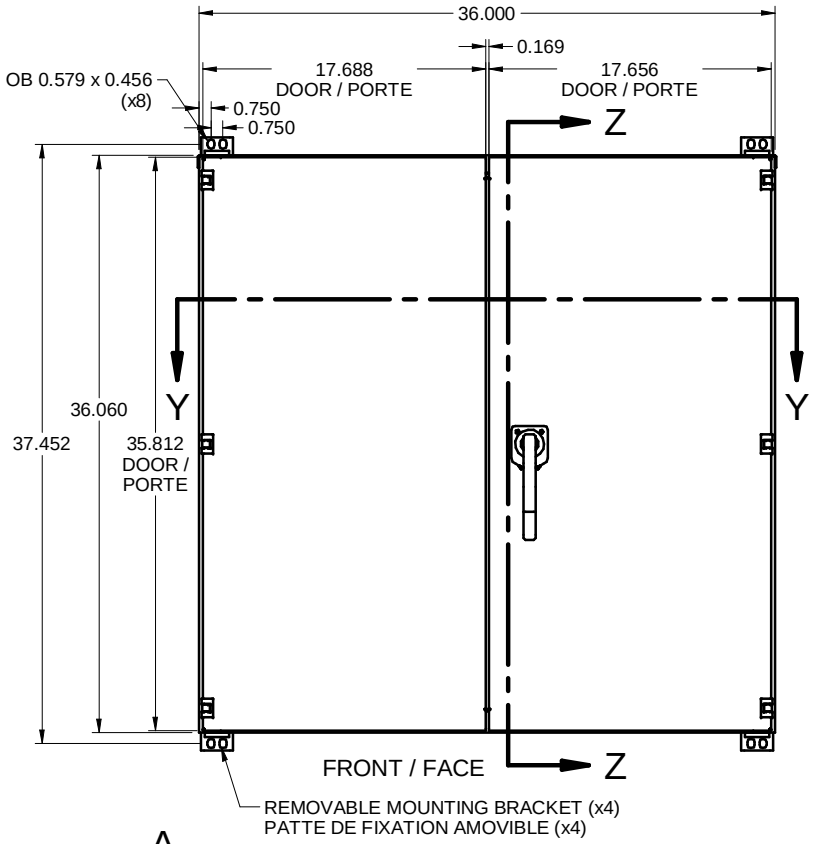

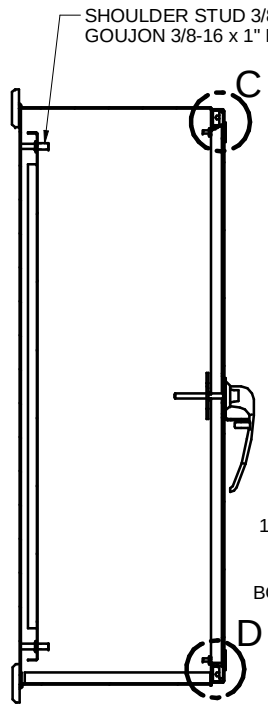

SECTION Z-Z

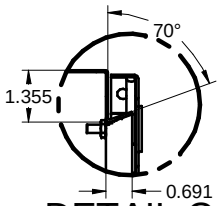

DETAIL C

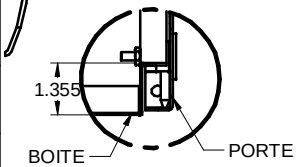

DETAIL D

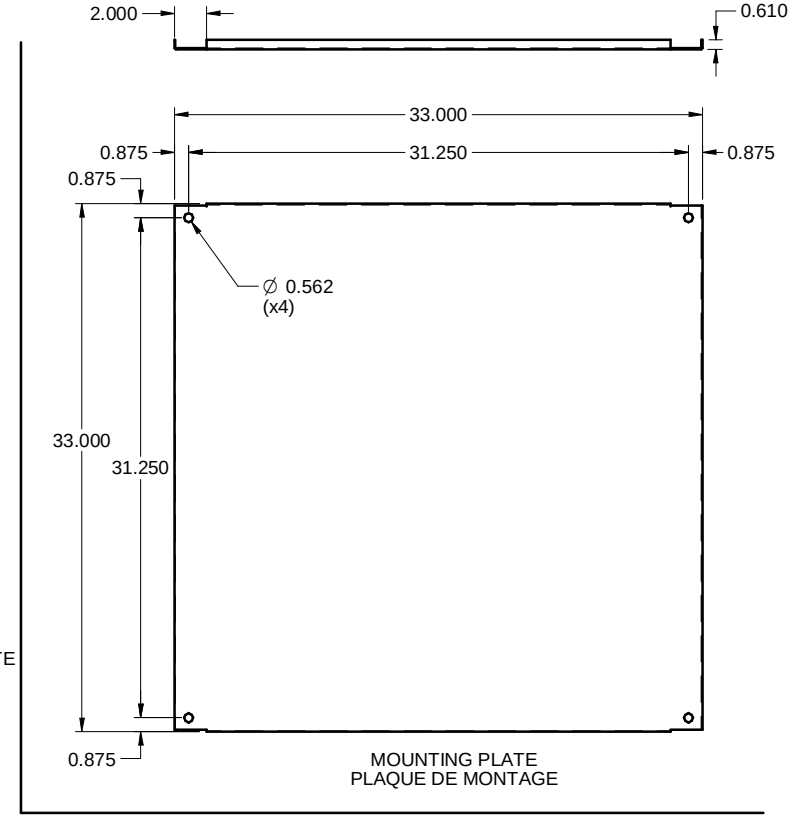

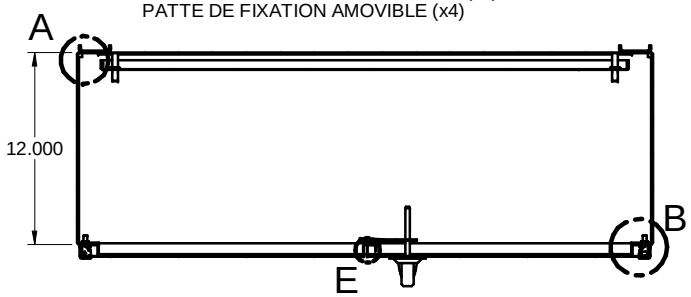

SECTION Y-Y

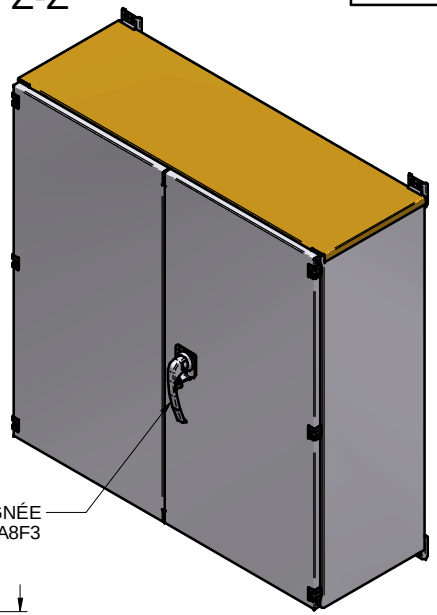

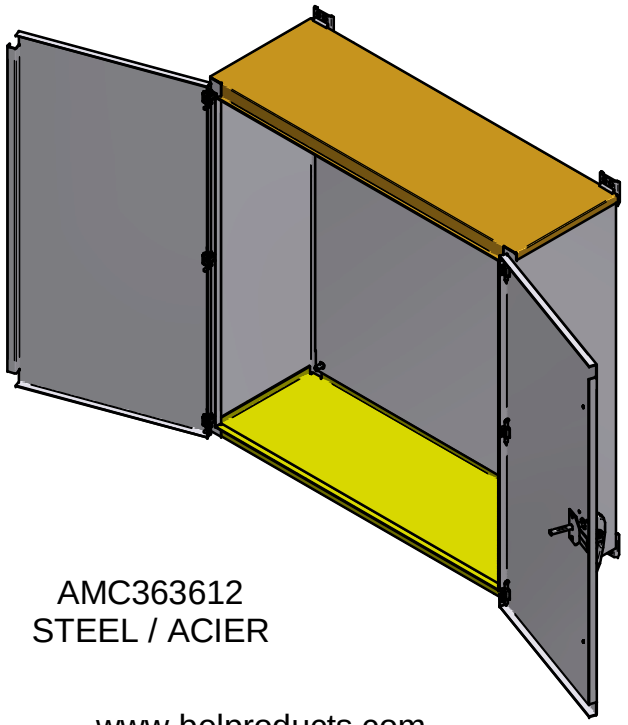

AMC363612
STEEL / ACIER

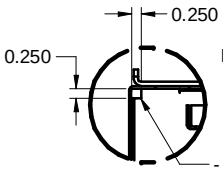

DETAIL A

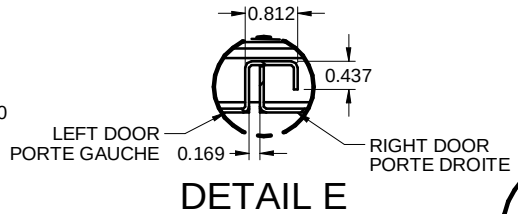

DETAIL E

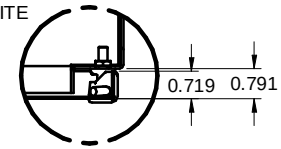

DETAIL B

www.belproducts.com