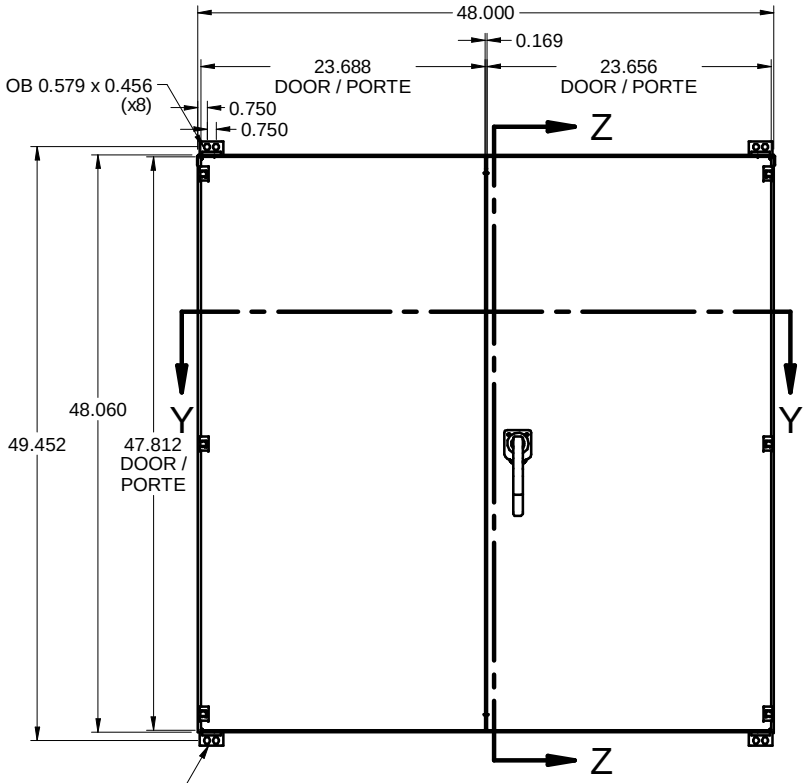

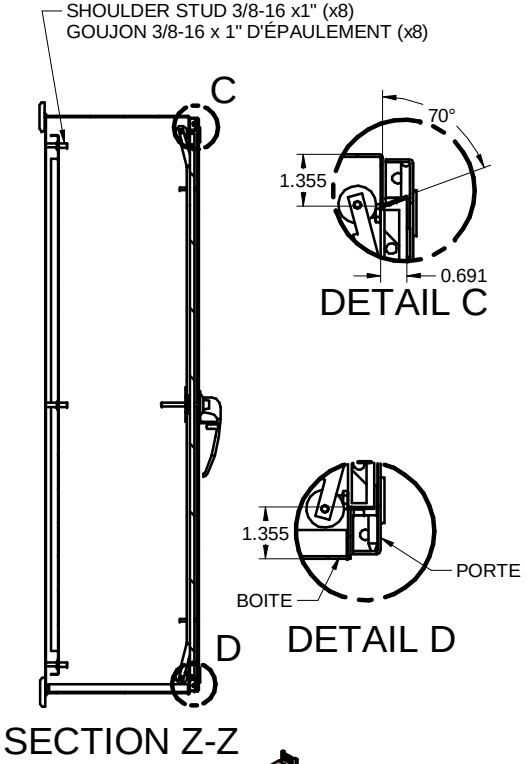

SECTION Z-Z

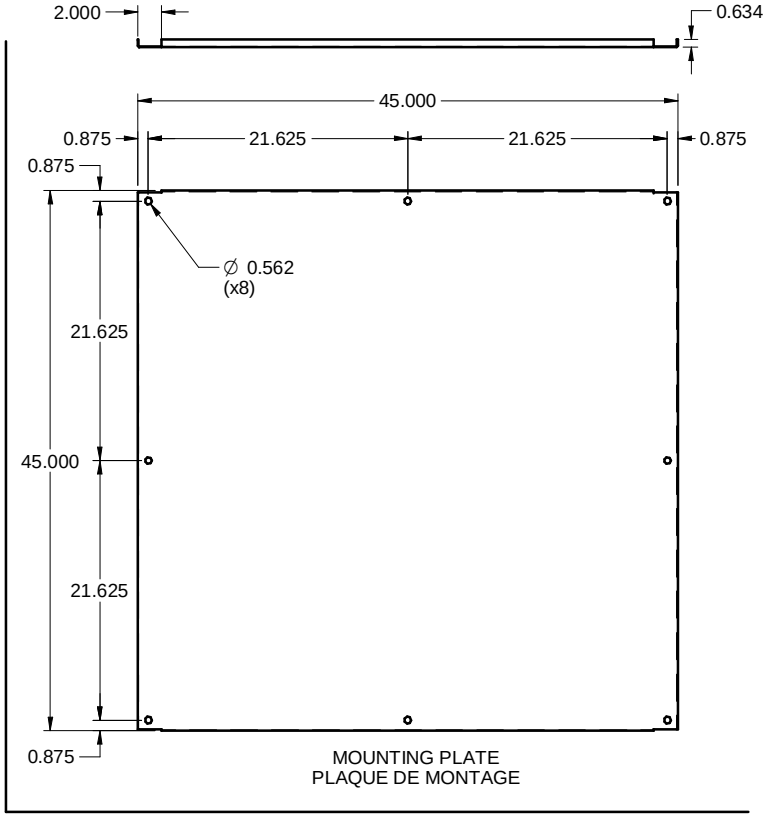

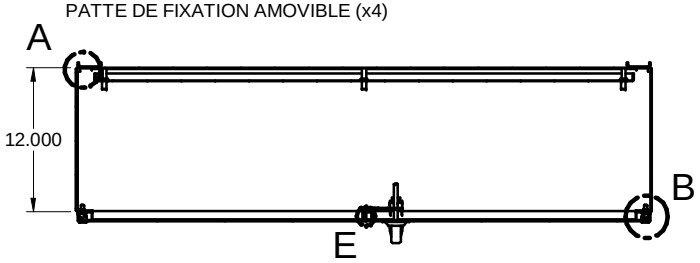

SECTION Y-Y

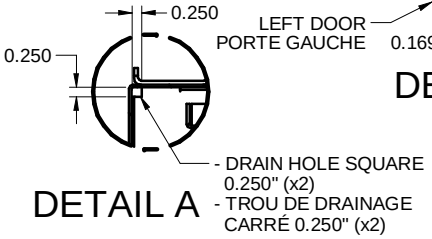

DETAIL A

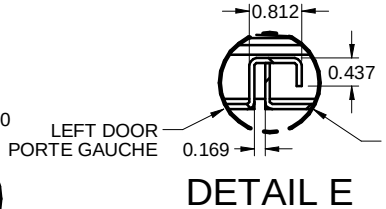

DETAIL E

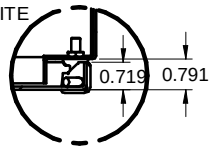

DETAIL B

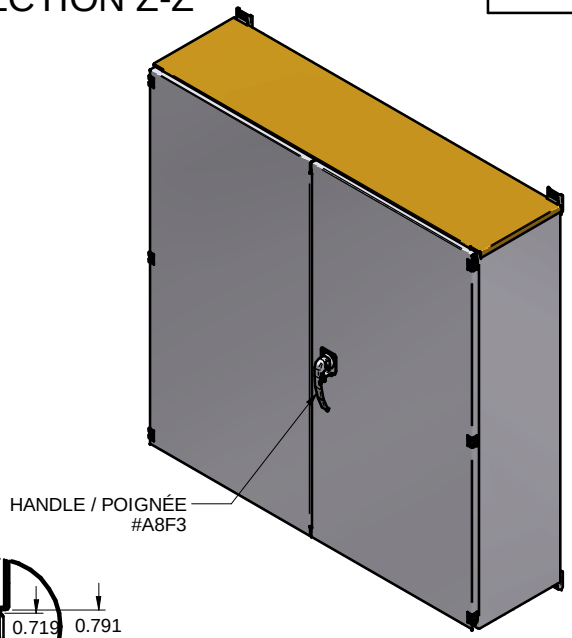

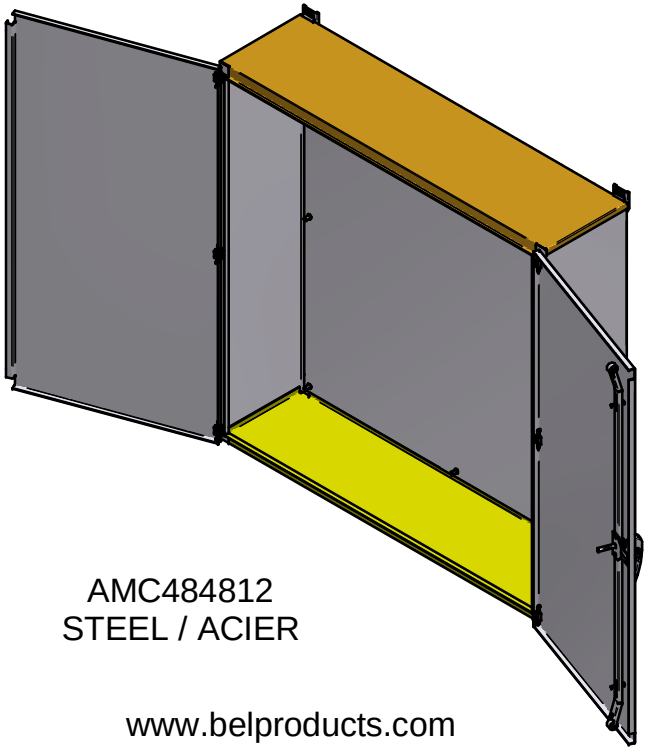

AMC484812
STEEL / ACIER

www.belproducts.com